C85TLRQ 1992 / CYLINDER CRANKCASE

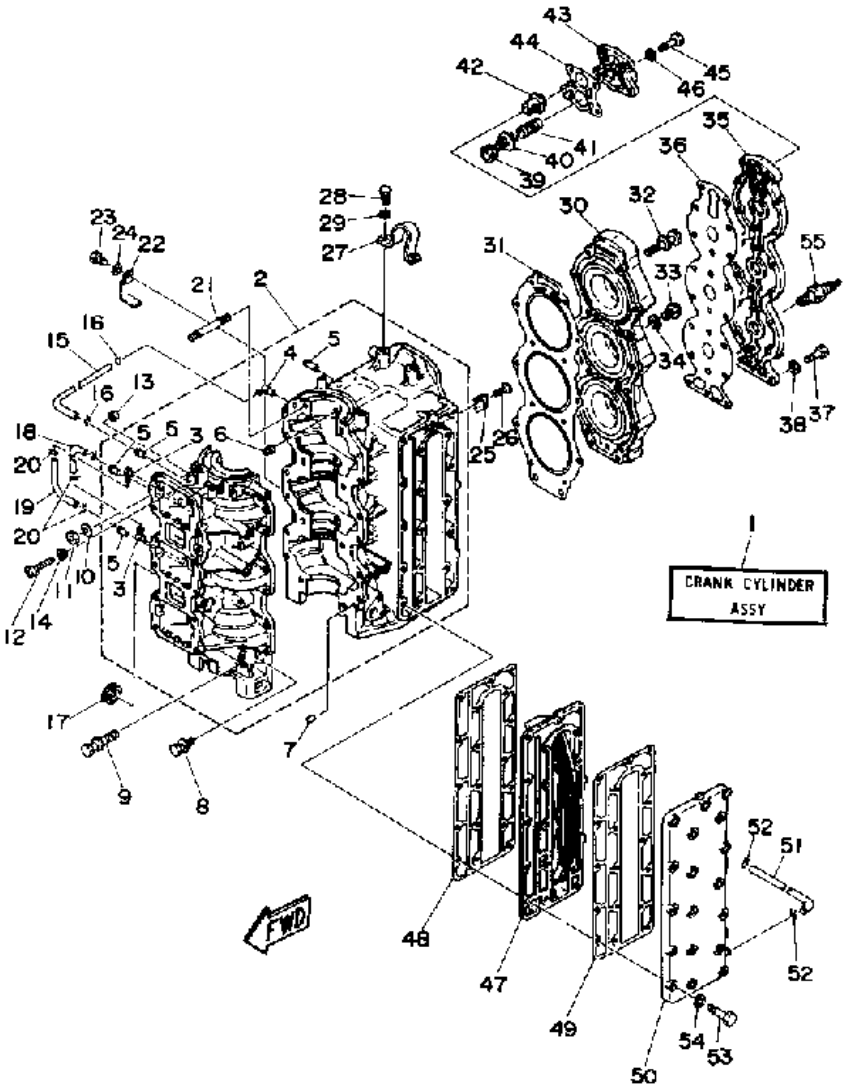

©2014 Yamaha Motor Corporation, U.S.A. All rights reserved.

Part List

C85TLRQ 1992 / CYLINDER CRANKCASE

REF - NO	PART NUMBER	PART NAME	QUANTITY	REMARKS
1	688-W0090-42-EK	CRANK-CYLINDER.ASSEMBLY.	1	
2	688-15100-05-94	CRANKCASE ASSEMBLY	1	
3	688-11370-00-00	.CHECK VALVE ASSY	2	
4	650-11370-00-00	.CHECK VALVE ASSY	1	
5	624-14485-00-00	.PIPE, JOINT	4	
6	663-11518-01-00	.LOCK BEARING	3	
7	93608-12063-00	PIN, DOWEL	2	
8	90119-06M12-00	BOLT, WITH WASHER	12	
9	90119-10M07-00	BOLT, WITH WASHER	6	
10	90201-100F7-00	WASHER, PLATE	2	
11	95313-10600-00	NUT	2	
12	90157-06014-00	SCREW, PAN HEAD	1	
13	688-44194-00-00	CAP	1	
14	95380-06700-00	NUT	1	
15	90445-07260-00	HOSE (L276)	1	
16	90467-06016-00	CLIP	2	
17	90480-24M04-00	GROMMET	1	
18	90445-07M00-00	HOSE (L100)	1	
19	90445-07M23-00	HOSE (L408)	1	
20	90467-06016-00	CLIP	4	
21	90116-10M06-00	BOLT, STUD	2	
22	90465-12M03-00	CLAMP	1	
23	97395-06010-00	BOLT	1	
24	92995-06100-00	WASHER, SPRING	1	
25	688-11325-00-00	ANODE	2	
26	98680-04016-00	SCREW OVAL HEAD	2	
27	688-11119-00-00	HANGER, ENGINE	1	
28	97313-08020-00	BOLT, HEXAGON	2	
29	92990-08100-00	WASHER, SPRING	2	
30	688-11111-02-94	HEAD, CYLINDER 1	1	
31	688-11181-A0-00	GASKET, CYLINDER HEAD 1	1	
32	90119-08M21-00	BOLT, WITH WASHER	14	
33	90340-14M00-00	.PLUG, STRAIGHT SCREW	1	
34	90430-14115-00	.GASKET	1	
35	688-11191-00-9M	COVER, CYLINDER HEAD 1	1	
36	688-11193-A1-00	GASKET, HEAD COVER 1	1	
37	97313-06025-00	BOLT	18	
38	92990-06600-00	WASHER, PLATE	18	
39	90480-20M05-00	GROMMET	1	
40	688-12416-00-00	VALVE, PRESSURE CONTROL	1	
41	90501-16M11-00	SPRING, COMPRESSION	1	
42	688-12411-10-00	THERMOSTAT	1	
43	688-12413-00-9M	COVER, THERMOSTAT	1	
44	688-12414-A1-00	.GASKET, COVER	1	
45	97013-06035-00	BOLT	4	
46	92990-06600-00	WASHER, PLATE	4	
47	688-41111-00-9M	INNER COVER, EXHAUST	1	
48	688-41112-A0-00	GASKET, EXHAUST INNER COVER	1	
49	688-41114-A0-00	.GASKET, EXHAUST OUTER COVER	1	
50	688-41113-00-9M	OUTER COVER, EXHAUST	1	
51	663-24312-01-00	PIPE 2	1	

52	90467-08004-00	CLIP	2	
53	97313-08040-00	BOLT, HEXAGON	18	
54	92990-08600-00	..WASHER, PLATE	18	
55	NGK-B8HS1-00-00	PLUG, SPARK (NGK B8HS-10)	3	

Part Notes

C85TLRQ 1992 / CYLINDER CRANKCASE

PART NUMBER		NOTE TEXT
92990-06600-00		OEM: This part number is among the Top 100 Most Popular Marine Maintenance Parts as of March 2014.
90480-20M05-00		OEM: This part number is among the Top 100 Most Popular Marine Maintenance Parts as of March 2014.
688-12414-A1-00		OEM: This part number is among the Top 100 Most Popular Marine Maintenance Parts as of March 2014.
92990-06600-00		OEM: This part number is among the Top 100 Most Popular Marine Maintenance Parts as of March 2014.

©2014 Yamaha Motor Corporation, U.S.A. All rights reserved.

C85TLRQ 1992 / CRANKSHAFT PISTON

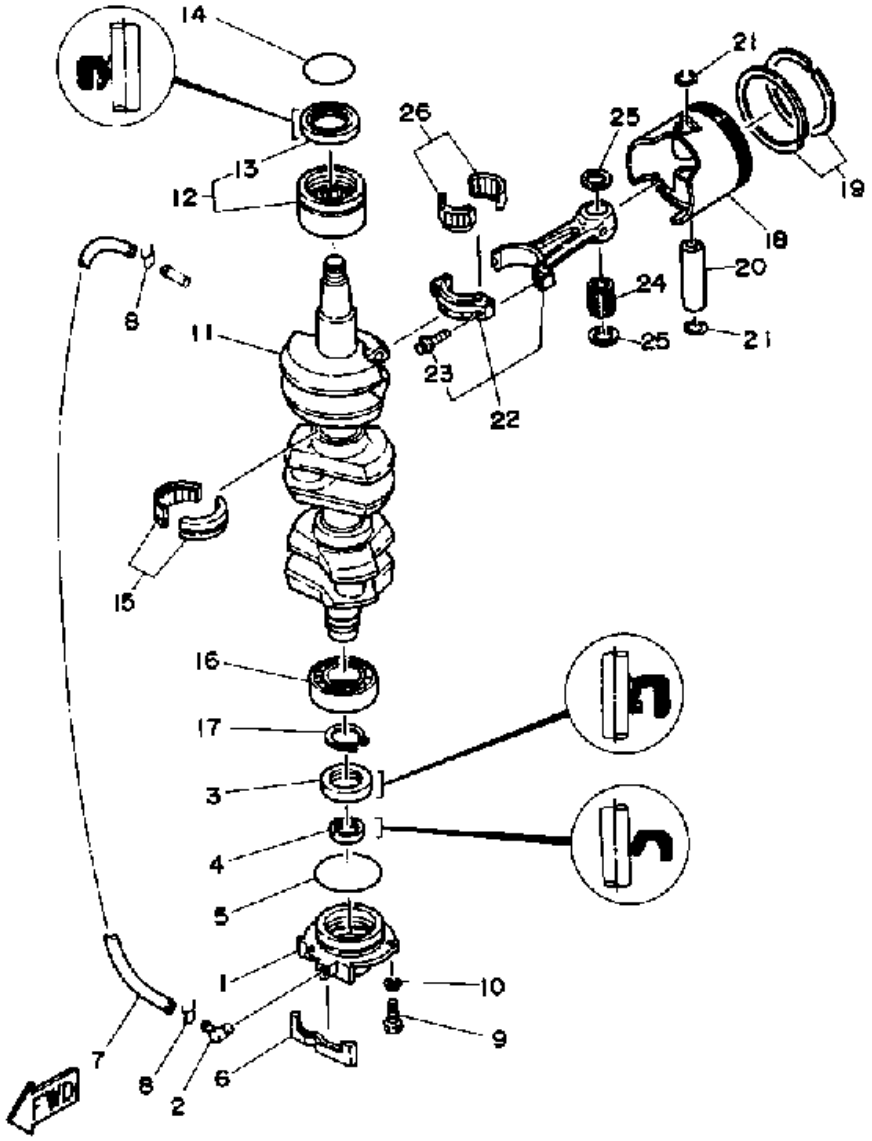

©2014 Yamaha Motor Corporation, U.S.A. All rights reserved.

Part List

C85TLRQ 1992 / CRANKSHAFT PISTON

REF - NO	PART NUMBER	PART NAME	QUANTITY	REMARKS
1	6H1-15359-01-94	HOUSING, OIL SEAL	1	
2	688-11370-00-00	CHECK VALVE ASSY	1	
3	93102-30M05-00	.OIL SEAL	1	
4	93104-20M02-00	OIL SEAL	1	
5	93210-62269-00	O-RING	1	
6	688-15379-00-00	SEAL, CRANKCASE	1	
7	90445-07M86-00	HOSE (L460)	1	
8	90467-06016-00	CLIP	2	
9	97395-06020-00	BOLT, HEXAGON	3	
10	92990-06600-00	WASHER, PLATE	3	
11	688-11411-01-00	CRANKSHAFT	1	
12	93310-636U4-00	BEARING	1	
13	93102-36M24-00	.OIL SEAL	1	
14	93210-46M16-00	.O-RING	1	
15	93310-835U8-00	BEARING	2	
16	93306-206U5-00	BEARING	1	
17	93410-32M00-00	CIRCLIP	1	
18	688-11631-02-96	PISTON STD (STD)	3	
18	688-11636-02-00	PISTON 2 O/S 0.50 (0.50MM O/S)	3	ALT. PART
19	688-11610-02-00	PISTON RINGSET STD (STD)	3	
19	688-11610-22-00	PISTON RINGSET 2ND (2ND O/S)	3	ALT. PART
20	663-11633-00-00	PIN, PISTON	3	
21	688-11634-00-00	CLIP, PISTON PIN	6	
22	688-11650-03-00	CONNECTING ROD ASSY	3	
23	90109-08M61-00	.BOLT	2	
24	93603-21111-00	PIN, DOWEL	84	
25	90201-20417-00	WASHER, PLATE	6	
26	93310-730V8-00	BEARING	3	

Part Notes

C85TLRQ 1992 / CRANKSHAFT PISTON

PART NUMBER		NOTE TEXT
92990-06600-00		OEM: This part number is among the Top 100 Most Popular Marine Maintenance Parts as of March 2014.
93603-21111-00		OEM: This part number is among the Top 100 Most Popular Marine Maintenance Parts as of March 2014.

©2014 Yamaha Motor Corporation, U.S.A. All rights reserved.

C85TLRQ 1992 / INTAKE

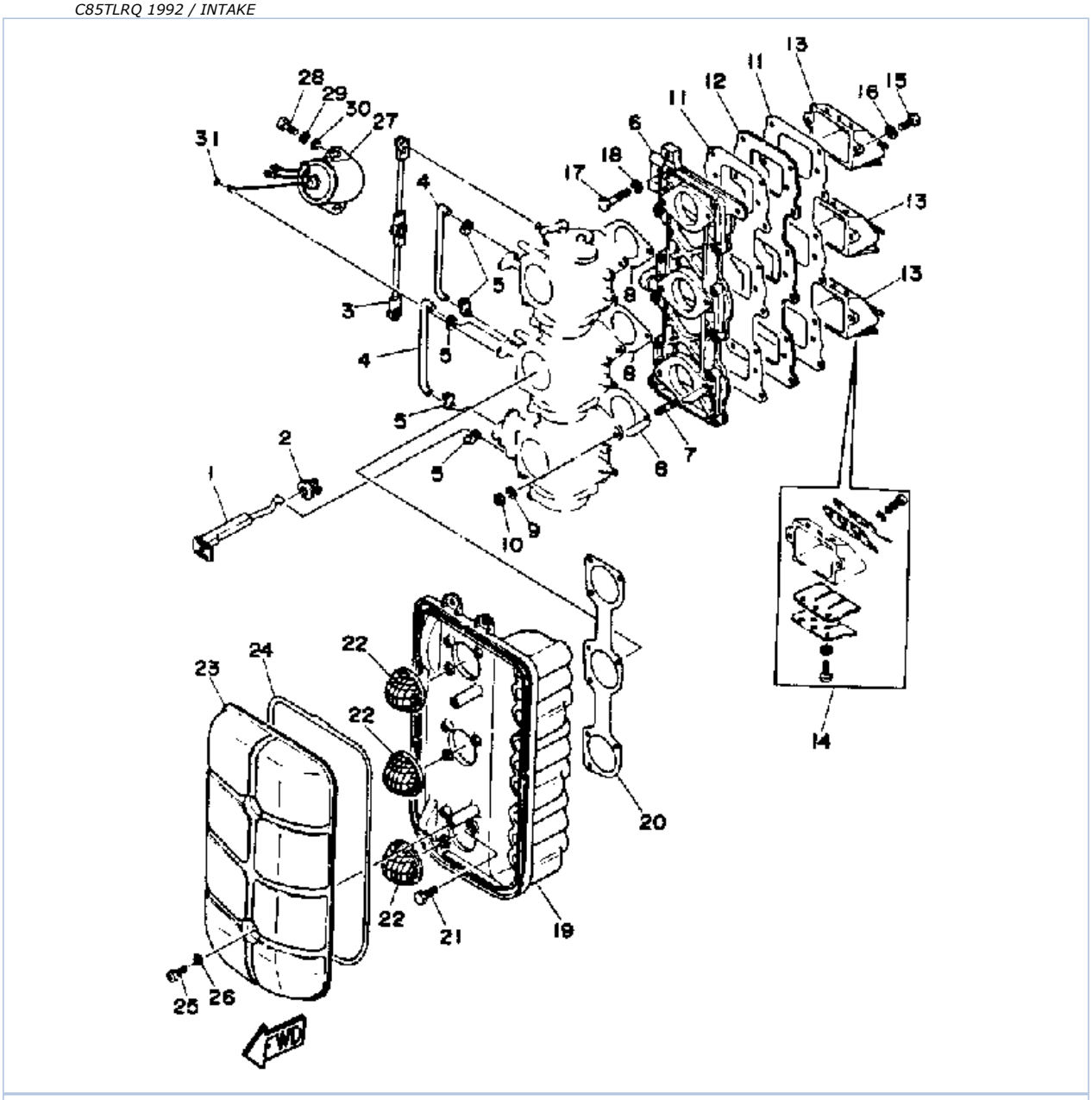

©2014 Yamaha Motor Corporation, U.S.A. All rights reserved.

Part List

C85TLRQ 1992 / INTAKE

REF - NO	PART NUMBER	PART NAME	QUANTITY	REMARKS
1	692-41256-00-00	ROD, CHOKE 1	1	
2	689-41273-00-00	GROMMET	1	
3	688-41217-01-00	ROD, ACCEL. LEVER	1	
4	688-41257-01-00	ROD, CHOKE 2	2	
5	661-41262-02-00	JOINT, CHOKE LEVER	5	
6	688-13641-00-94	MANIFOLD 1	1	
7	90116-06122-00	BOLT, STUD	6	
8	688-14198-A1-00	GASKET	3	
9	92995-06100-00	WASHER, SPRING	6	
10	95380-06600-00	NUT, HEXAGON	6	
11	688-13621-A1-00	.GASKET, VALVE SEAT	2	
12	688-13624-00-00	PLATE,REED VALVE	1	
13	688-13610-00-00	REED VALVE ASSY	3	
14	688-W0004-00-00	.REED SET	3	
15	98580-05020-00	.SCREW, PAN HEAD	6	
16	92990-05100-00	.WASHER, SPRING	6	
17	97313-06030-00	BOLT	12	
18	92995-06100-00	WASHER, SPRING	12	
19	688-14417-00-94	COVER 1	1	
20	688-14483-A0-00	GASKET	1	
21	97313-06018-00	BOLT	6	
22	688-14481-00-00	CAP, CARBURETOR	3	
23	688-14418-00-00	COVER 2	1	
24	688-14416-00-00	GASKET, AIR CLEANER	1	
25	98595-06016-00	UNAVAILABLE IN PRICE BOOK	2	
26	90209-06M05-00	WASHER	2	
27	688-86110-01-00	SOLENOID COIL ASSEMBLY	1	
28	98503-06014-00	SCREW, PAN HEAD	2	
29	92995-06100-00	WASHER, SPRING	2	
30	92990-06200-00	WASHER, PLAIN	2	
31	93210-03261-00	O-RING	1	

C85TLRQ 1992 / CARBURETOR

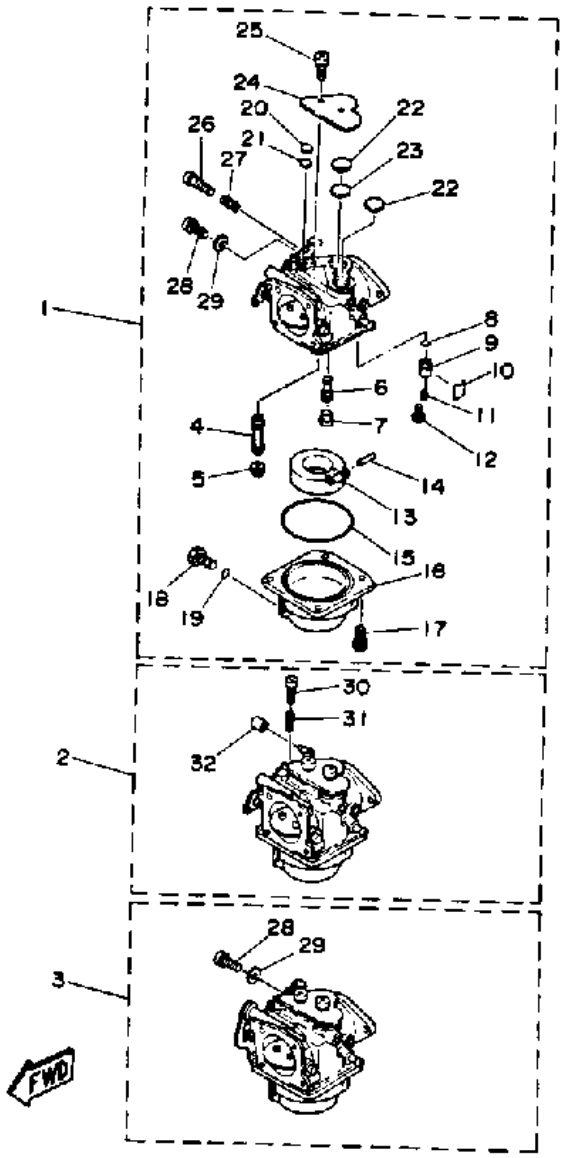

©2014 Yamaha Motor Corporation, U.S.A. All rights reserved.

Part List

C85TLRQ 1992 / CARBURETOR

REF - NO	PART NUMBER	PART NAME	QUANTITY	REMARKS
1	688-14301-08-00	CARBURETOR ASSEMBLY 1	1	
2	688-14302-08-00	CARBURETOR ASSEMBLY 2	1	
3	688-14303-08-00	CARBURETOR ASSEMBLY 3	1	
4	688-14947-00-00	.JET, NEEDLE	3	
5	676-14943-40-00	.JET, MAIN (165)	3	
6	676-14948-18-00	.JET (#78)	3	
7	676-14966-00-00	.CAP	3	
8	93210-04228-00	.O-RING	3	
9	692-14590-00-00	.VALVE SEAT	3	
10	663-14159-00-00	.CLIP	3	
11	676-14186-00-00	.PIN, FLOAT	3	
12	98580-04008-00	.SCREW, PAN HEAD	3	
13	676-14985-01-00	.FLOAT	3	
14	688-14548-00-00	.PIN, FLOAT ARM	3	
15	676-14984-00-00	.GASKET, FLOAT CHAMBER	3	
16	688-14980-00-00	.BODY, FLOAT CHAMBER	3	
17	97980-04114-00	.SCREW, WITH WASHER	12	
18	6H3-14992-00-00	.SCREW, DRAIN	3	
19	93210-04230-00	.O-RING	3	
20	663-14126-00-00	.GASKET	3	
21	663-14527-00-00	.PLATE	3	
22	688-14126-00-00	.GASKET	6	
23	688-14527-00-00	.PLATE	3	
24	688-14572-01-00	.PLATE, STAY	3	
25	97980-05310-00	.SCREW, WITH WASHER	6	
26	692-14923-00-00	.SCREW, PILOT	3	
27	679-14555-00-00	.SPRING	3	
28	663-14592-00-00	.SCREW	2	UPPER/ LOWER
29	90201-05652-00	.WASHER, PLATE	2	UPPER/ LOWER
30	663-14523-00-00	.SCREW, STOP	1	CENTER
31	90501-10326-00	.SPRING, COMPRESSION	1	CENTER
32	6H2-14578-00-00	.COLLAR	1	CENTER

C85TLRQ 1992 / FUEL SYSTEM

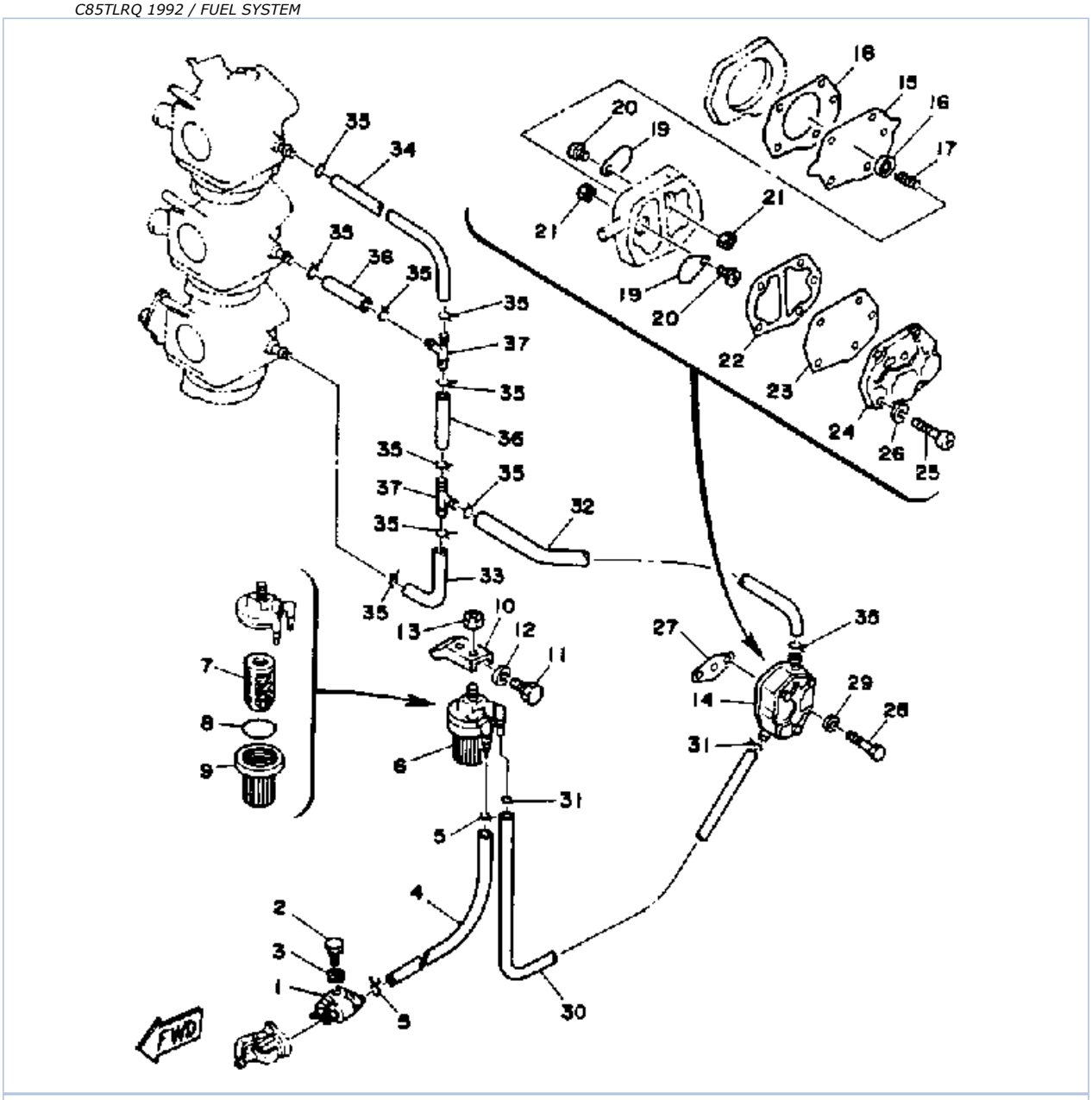

©2014 Yamaha Motor Corporation, U.S.A. All rights reserved.

Part List

C85TLRQ 1992 / FUEL SYSTEM

REF - NO	PART NUMBER	PART NAME	QUANTITY	REMARKS
1	6G1-24304-02-00	FUEL PIPE JOINT COMP. 1	1	
2	97395-06020-00	BOLT, HEXAGON	1	
3	92990-06600-00	WASHER, PLATE	1	
4	90445-09078-00	HOSE	1	
5	90467-08004-00	CLIP	2	
6	655-24560-01-00	FILTER ASSEMBLY	1	
7	6F5-24563-00-00	.ELEMENT, FILTER	1	
8	93210-37M25-00	.O-RING	1	
9	655-24521-01-00	.CUP, FILTER	1	
10	648-24566-01-00	BRACKET, FILTER	1	
11	97313-06014-00	BOLT, HEXAGON	1	
12	92995-06100-00	WASHER, SPRING	1	
13	95380-08600-00	NUT	1	
14	6A0-24410-05-00	FUEL PUMP ASSEMBLY	1	
15	648-24411-00-00	.DIAPHRAGM	1	
16	648-24424-00-00	.SEAT, SPRING	1	
17	648-24423-00-00	.SPRING, DIAPHRAGM	1	
18	648-24434-01-00	.GASKET, BODY	1	
19	6A0-24421-01-00	.VALVE, CHECK	2	
20	6A0-14325-00-00	.SCREW, PAN HEAD	2	
21	95380-03600-00	.NUT	2	
22	648-24435-02-00	.GASKET, BODY 2	1	
23	663-24411-00-00	.DIAPHRAGM	1	
24	648-24413-01-00	.BODY 2	1	
25	98580-05530-00	.SCREW, PAN HEAD	3	
26	92990-05100-00	.WASHER, SPRING	3	
27	650-24431-A0-00	GASKET, FUEL PUMP 1	1	
28	97395-06040-00	BOLT	2	
29	92990-06600-00	WASHER, PLATE	2	
30	90445-09094-00	HOSE (L210)	1	
31	90467-08004-00	CLIP	2	
32	90445-09100-00	HOSE (L260)	1	
33	688-24313-00-00	PIPE 3	1	
34	688-24314-00-00	PIPE 4	1	
35	90467-08004-00	CLIP	10	
36	90445-09220-00	HOSE (L30)	2	
37	688-24378-00-00	PIPE, JOINT 3	2	

Part Notes

C85TLRQ 1992 / FUEL SYSTEM

PART NUMBER		NOTE TEXT
92990-06600-00		OEM: This part number is among the Top 100 Most Popular Marine Maintenance Parts as of March 2014.
650-24431-A0-00		OEM: This part number is among the Top 100 Most Popular Marine Maintenance Parts as of March 2014.
92990-06600-00		OEM: This part number is among the Top 100 Most Popular Marine Maintenance Parts as of March 2014.

©2014 Yamaha Motor Corporation, U.S.A. All rights reserved.

C85TLRQ 1992 / FUEL TANK

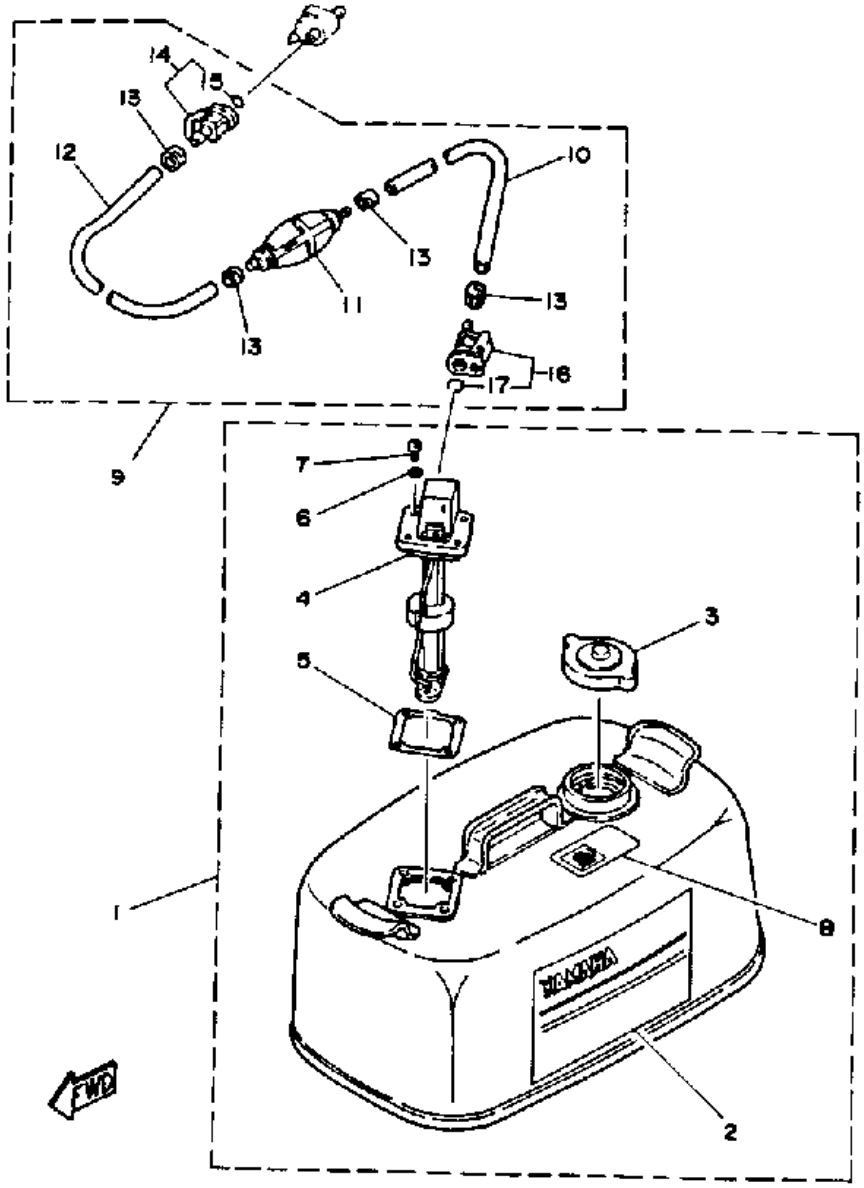

©2014 Yamaha Motor Corporation, U.S.A. All rights reserved.

Part List

C85TLRQ 1992 / FUEL TANK

REF - NO	PART NUMBER	PART NAME	QUANTITY	REMARKS
1	6Y1-W2420-42-24	FUEL TANK ASSEMBLY	1	
2	6Y1-24244-20-00	.GRAPHIC, SIDE	1	
3	6Y1-24610-00-00	.CAP ASSEMBLY	1	
4	6Y1-24260-02-00	.FUEL METER ASSEMBLY	1	
5	6Y1-24268-00-00	.GASKET, FUEL METER	1	
6	6Y1-24329-00-00	.SEAL	4	
7	98586-05016-00	.SCREW, PAN HEAD	4	
8	6Y1-24254-40-00	.GRAPHIC, FUEL TANK 7	1	
9	6Y1-24306-51-00	FUEL PIPE COMP. 1	1	
10	90445-11M06-00	.HOSE (L2050)	1	
11	6Y1-24360-51-00	.PRIMER PUMP ASSY	1	
12	90445-11M05-00	.HOSE (L850)	1	
13	650-24351-51-00	.BAND 1	4	
14	6G1-24305-01-00	.FUEL PIPE JOINT COMP 2	1	
15	93210-08287-00	..O-RING	1	
16	6Y1-24305-02-00	.FUEL PIPE JOINT COMP 2	1	
17	93210-08287-00	..O-RING	1	

C85TLRQ 1992 / TOP COWLING

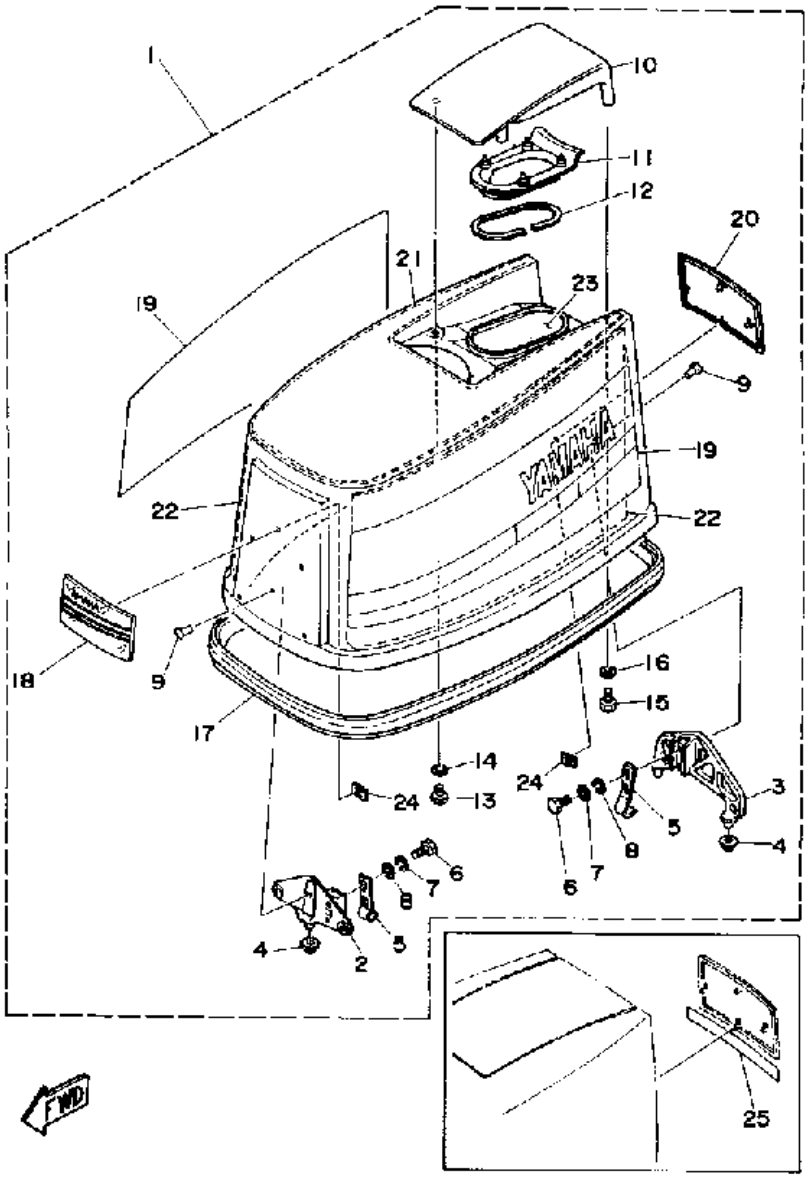

©2014 Yamaha Motor Corporation, U.S.A. All rights reserved.

Part List

C85TLRQ 1992 / TOP COWLING

REF - NO	PART NUMBER	PART NAME	QUANTITY	REMARKS
1	688-42610-L1-EK	TOP COWLING ASSEMBLY.	1	
2	688-42647-00-94	.HOLDER, CLAMP BAND	1	
3	688-42649-00-94	.HOLDER, CLAMP BAND	1	
4	663-42662-00-00	.DAMPER	3	
5	688-42652-10-00	.HOOK	2	
6	97080-06018-00	.BOLT	2	
7	92995-06100-00	.WASHER, SPRING	2	
8	92990-06600-00	.WASHER, PLATE	2	
9	90266-06M02-00	.RIVET	6	
10	688-42613-00-EK	.MOLDING, AIR DUCT	1	
11	688-42618-00-00	.AIR SHROUD, TOP COWLING	1	
12	688-42628-00-00	.SEAL	1	
13	97395-06016-00	.BOLT, HEX	2	
14	92990-06600-00	.WASHER, PLATE	2	
15	97395-06025-00	.BOLT	2	
16	92990-06600-00	.WASHER, PLATE	2	
17	688-42615-00-00	.SEAL	1	
18	6H1-42686-00-00	.EMBLEM, FRONT	1	
19	688-W0070-02-00	.GRAPHIC SET	1	
20	688-42687-60-00	.EMBLEM, REAR	1	
21	689-W4266-30-00	.DAMPER, FORM	1	
22	689-W4266-40-00	.DAMPER, FORM	2	
23	689-W4266-10-00	.DAMPER, FORM	1	
24	90183-05M01-00	.NUT, SPRING	7	
25	6H1-42684-00-00	MARK, COWLING	1	POWER TRIM & TILT

Part Notes

C85TLRQ 1992 / TOP COWLING

PART NUMBER		NOTE TEXT
92990-06600-00		OEM: This part number is among the Top 100 Most Popular Marine Maintenance Parts as of March 2014.
92990-06600-00		OEM: This part number is among the Top 100 Most Popular Marine Maintenance Parts as of March 2014.
92990-06600-00		OEM: This part number is among the Top 100 Most Popular Marine Maintenance Parts as of March 2014.

©2014 Yamaha Motor Corporation, U.S.A. All rights reserved.

C85TLRQ 1992 / BOTTOM COWLING

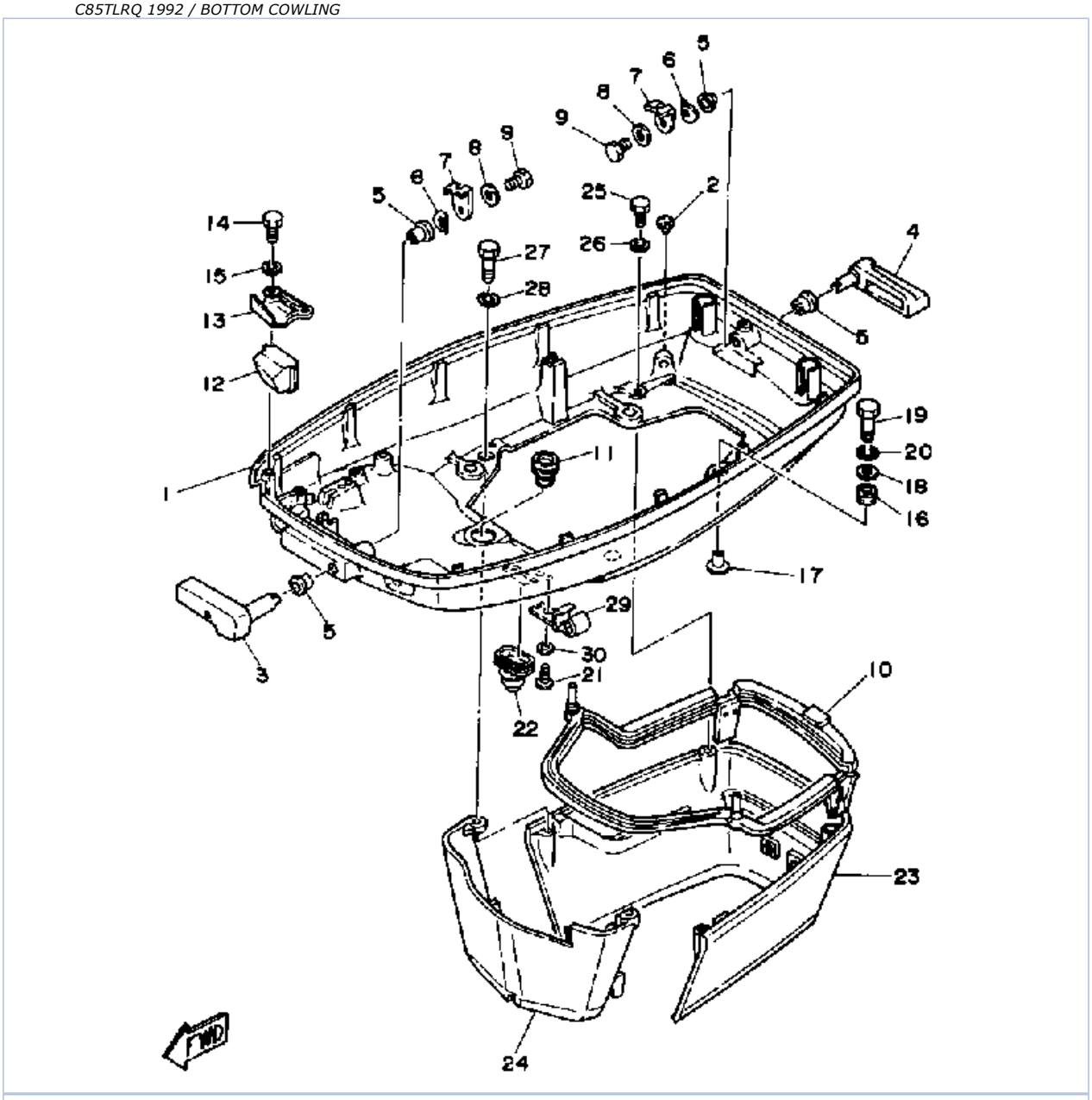

©2014 Yamaha Motor Corporation, U.S.A. All rights reserved.

Part List

C85TLRQ 1992 / BOTTOM COWLING

REF - NO	PART NUMBER	PART NAME	QUANTITY	REMARKS
1	688-42711-03-EK	BOTTOM COWLING	1	
2	6H3-44391-01-00	NIPPLE, HOSE	1	
3	688-42815-00-EK	LEVER, CLAMP	1	
4	688-42817-00-EK	LEVER, CLAMP 3	1	
5	90386-13M38-00	BUSH	4	
6	90206-13019-00	WASHER, WAVE	2	
7	688-42816-00-00	LEVER, CLAMP 2	2	
8	90201-06M02-00	WASHER, PLATE	2	
9	97013-06012-00	BOLT	2	
10	688-42716-02-00	RUBBER, SEAL 1	1	
11	663-42724-00-00	GROMMET	1	
12	688-42725-10-00	GROMMET	1	
13	688-42738-00-94	PLATE, FITTING	1	
14	97313-06016-00	BOLT, HEXAGON	2	
15	92990-06600-00	WASHER, PLATE	2	
16	90480-09M12-00	GROMMET	4	
17	90387-06M69-00	COLLAR	4	
18	90201-06416-00	WASHER, PLATE	4	
19	97395-06030-00	BOLT	4	
20	92995-06100-00	WASHER, SPRING	4	
21	90157-06M01-00	SCREW, PAN HEAD	1	
22	688-42726-10-00	GROMMET	1	
23	688-42741-00-EK	APRON 1	1	
24	688-42771-00-EJ	APRON 2	1	
25	97395-06020-00	BOLT, HEXAGON	2	
26	92995-06100-00	WASHER, SPRING	2	
27	97395-06030-00	BOLT	2	
28	92995-06100-00	WASHER, SPRING	2	
29	6E5-24367-01-00	CLAMP, FUEL PIPE 2	1	
30	92990-06600-00	WASHER, PLATE	1	

Part Notes

C85TLRQ 1992 / BOTTOM COWLING

PART NUMBER		NOTE TEXT
92990-06600-00		OEM: This part number is among the Top 100 Most Popular Marine Maintenance Parts as of March 2014.
92990-06600-00		OEM: This part number is among the Top 100 Most Popular Marine Maintenance Parts as of March 2014.

©2014 Yamaha Motor Corporation, U.S.A. All rights reserved.

C85TLRQ 1992 / BRACKET

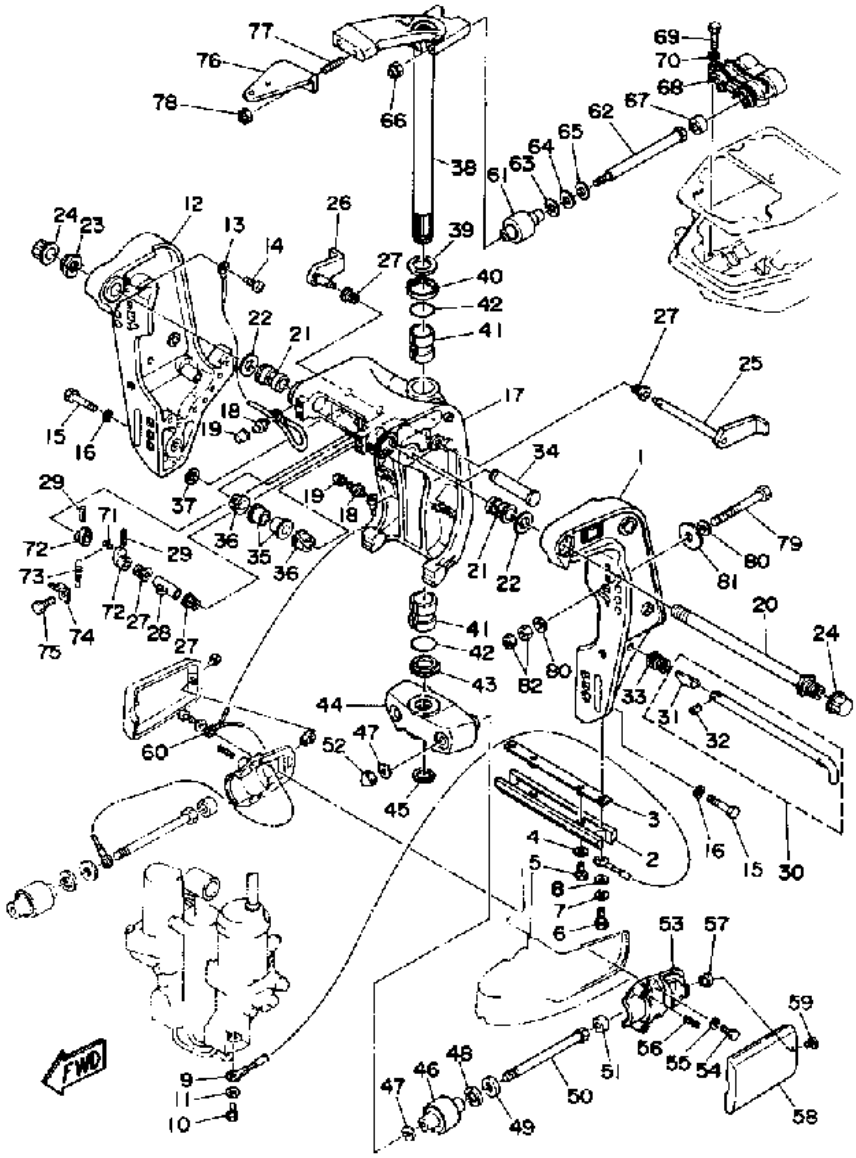

©2014 Yamaha Motor Corporation, U.S.A. All rights reserved.

Part List

C85TLRQ 1992 / BRACKET

REF - NO	PART NUMBER	PART NAME	QUANTITY	REMARKS
1	6H1-43111-00-EK	BRACKET, CLAMP	1	
2	6H1-45251-02-00	ANODE	2	
3	6H1-44526-00-00	PLATE	1	
4	90201-06M31-00	.WASHER, PLATE	2	
5	97395-06012-00	BOLT	2	
6	97395-06016-00	BOLT, HEX	2	
7	92995-06100-00	WASHER, SPRING	2	
8	92990-06600-00	WASHER, PLATE	2	
9	6H1-82148-00-00	WIRE, LEAD 4	1	
10	97395-06010-00	BOLT	1	
11	92990-06600-00	WASHER, PLATE	1	
12	6H1-43112-00-EK	BRACKET, CLAMP	1	
13	6E5-82148-00-00	WIRE, LEAD 4	1	
14	98580-06012-00	SCREW, PAN HEAD	1	
15	97395-10045-00	BOLT	6	
16	92990-10100-00	WASHER, SPRING	6	
17	6H1-43311-01-EK	BRACKET, SWIVEL 1	1	
18	93700-06M03-00	NIPPLE, GREASE	3	
19	663-45119-00-00	CAP, GREASE NIPPLE	3	
20	688-43131-03-00	BOLT, CLAMP BRACKET	1	
21	90386-22M15-00	BUSH	2	
22	90201-22M67-00	WASHER, PLATE	2	
23	90185-22043-00	NUT, SELF-LOCKING	1	
24	6G5-43145-00-00	CAP, CLAMP BRACKET	2	
25	6H1-43181-01-00	LEVER, TILT STOP	1	
26	6H1-43185-01-00	LEVER, TILT STOP	1	
27	90386-10M16-00	BUSH	4	
28	90387-10M02-00	COLLAR	1	
29	91690-30020-00	PIN, SPRING	2	
30	688-43160-01-00	TILT ROD ASSY	1	
31	688-43165-00-00	.PLATE, TILT LOCK	1	
32	91690-30012-00	.PIN, SPRING	1	
33	90502-16M02-00	SPRING, CONICAL	1	
34	6E5-43126-02-00	PIN, UPPER SHOCK MOUNT	1	
35	90386-18M63-00	BUSH	2	
36	90386-18M35-00	BUSH	2	
37	93410-18M02-00	CIRCLIP	1	
38	688-42510-02-EK	STEERING BRACKET ASSY	1	
39	90201-30M00-00	WASHER, PLATE	1	
40	90386-30M78-00	BUSH	1	
41	90386-30M77-00	BUSH	2	
42	93210-29M94-00	O-RING	2	
43	90386-30M60-00	BUSH	1	
44	663-44551-01-EK	HOUSING, LWR, MOUNTMOUNT RUBBER	1	
45	93410-28M06-00	CIRCLIP	1	
46	687-44555-00-94	MOUNT DAMPER, LOWER SIDE	2	
47	90201-12M16-00	WASHER, PLATE	4	
48	90202-25M04-00	WASHER, PLATE	2	
49	90201-13M19-00	WASHER, PLATE	2	
50	90109-12261-00	BOLT	2	
51	663-44575-00-00	DAMPER, LOWER MOUNT RUBBER	2	

52	95380-12800-00	NUT, CROWN	2	
53	687-44552-01-94	HOUSING, LOWER MOUNT RUBBER	2	
54	97395-08025-00	BOLT	4	
55	92990-08100-00	WASHER, SPRING	4	
56	90501-14236-00	SPRING, COMPRESSION	4	
57	90179-06066-00	NUT	2	
58	663-44553-00-EK	COVER, LWR.MOUNT	2	
59	98580-06016-00	SCREW, PAN HEAD	2	
60	688-82127-02-00	WIRE, LEAD 2	1	
61	688-44514-00-94	MOUNT DAMPER, UPPER SIDE	2	
62	90101-10M49-00	BOLT	2	
63	90201-20M21-00	WASHER, PLATE	2	
64	90202-20M06-00	WASHER, PLATE	2	
65	90201-11M22-00	WASHER, PLATE	2	
66	90185-10051-00	NUT, SELF-LOCKING	2	
67	663-44575-00-00	DAMPER, LOWER MOUNT RUBBER	2	
68	688-44511-00-94	COVER, UPPER MOUNT	1	
69	97090-08035-00	BOLT	3	
70	92990-08100-00	WASHER, SPRING	3	
71	90249-06M19-00	PIN	1	
72	6G5-43148-00-00	COLLAR, DISTANCE	2	
73	90506-14M24-00	SPRING, TENSION	1	
74	6G5-43144-00-00	HOOK, SPRING	1	
75	97395-06010-00	BOLT	1	
76	688-48511-11-EK	HOOK STEERING	1	STEERING GUIDE
77	90116-10175-00	BOLT, STUD	2	
78	90185-10051-00	NUT, SELF-LOCKING	2	
79	90101-12M65-00	BOLT	4	
80	92995-12200-00	WASHER	8	
81	90201-12426-00	WASHER, PLATE	4	
82	95380-12600-00	NUT	8	

Part Notes

C85TLRQ 1992 / BRACKET

PART NUMBER		NOTE TEXT
92990-06600-00		OEM: This part number is among the Top 100 Most Popular Marine Maintenance Parts as of March 2014.
92990-06600-00		OEM: This part number is among the Top 100 Most Popular Marine Maintenance Parts as of March 2014.

©2014 Yamaha Motor Corporation, U.S.A. All rights reserved.

C85TLRQ 1992 / POWER TRIM SENDER

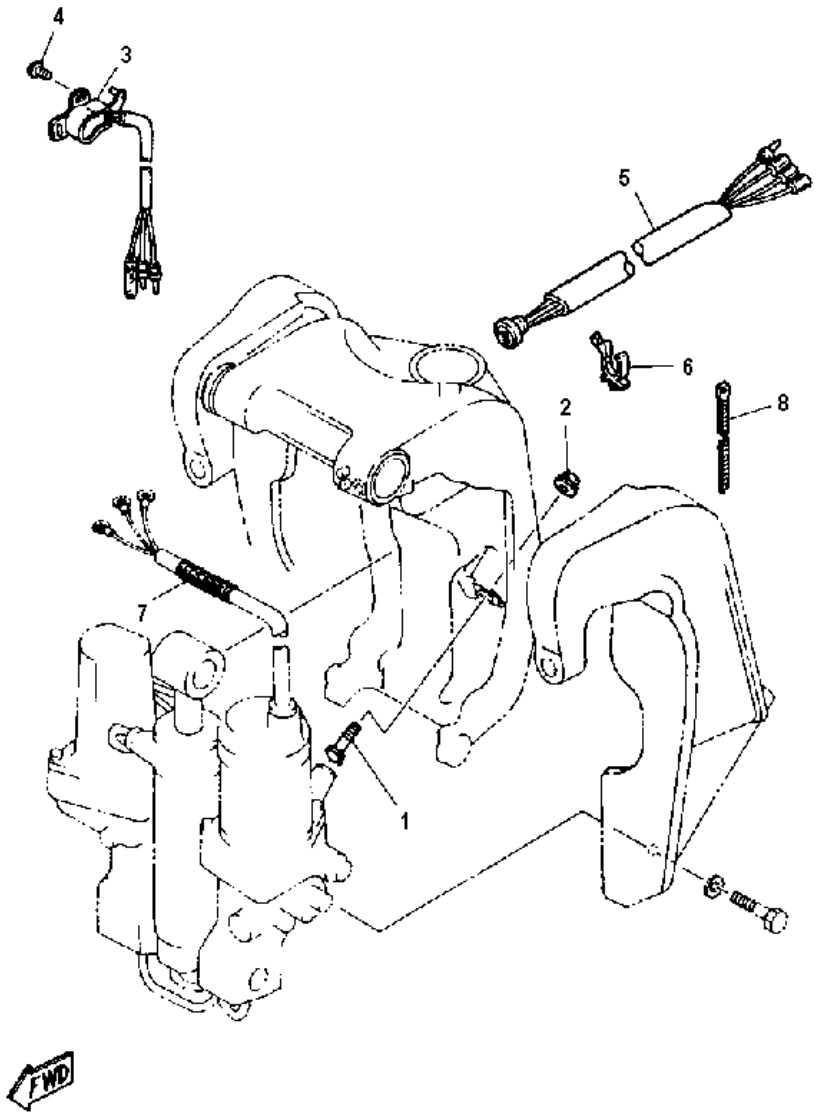

©2014 Yamaha Motor Corporation, U.S.A. All rights reserved.

Part List

C85TLRQ 1992 / POWER TRIM SENDER

REF - NO	PART NUMBER	PART NAME	QUANTITY	REMARKS
1	6H1-43376-00-00	BOLT, THRUST RECEIVER	2	
2	95780-08300-00	..NUT, FLANGE	2	
3	6H1-83672-10-00	TRIM SENDER	1	
4	98580-06016-00	SCREW, PAN HEAD	2	
5	6E5-82553-10-00	EXTENSION, WIRE HARNESS	1	
6	90464-09M13-00	CLAMP	1	
7	90440-14M00-00	PIPE	1	
8	90465-11M10-00	CLAMP	3	

C85TLRQ 1992 / POWER TRIM TILT ASSEMBLY

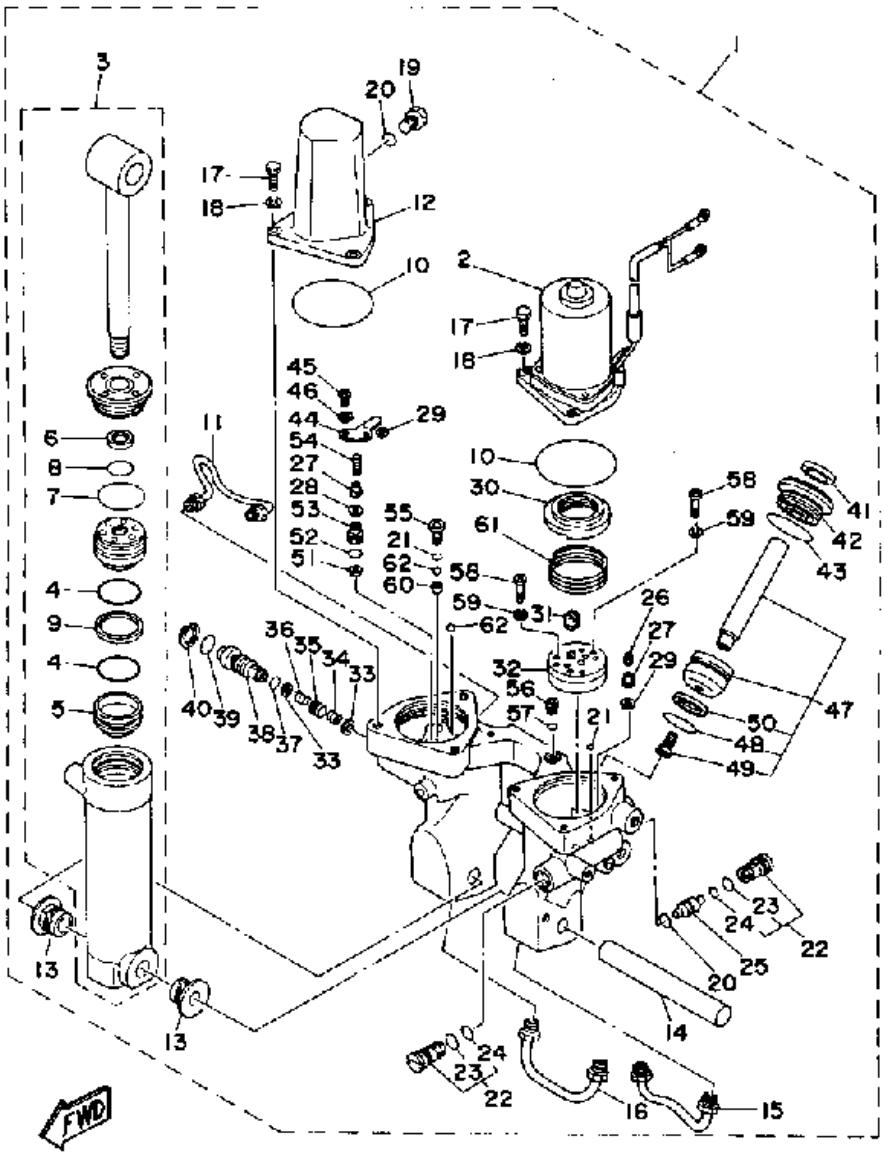

©2014 Yamaha Motor Corporation, U.S.A. All rights reserved.

Part List

C85TLRQ 1992 / POWER TRIM TILT ASSEMBLY

REF - NO	PART NUMBER	PART NAME	QUANTITY	REMARKS
1	6H1-43800-13-EK	PWR.TRIM&TILT ASSEMBLY	1	
2	6H1-43880-02-00	.MOTOR ASSY	1	
3	6H1-43840-11-00	.POWER TILT ASSY	1	
4	6H1-43861-10-00	..O-RING	2	
5	6H1-43814-11-00	..PISTON, FREE	1	
6	6H1-43872-00-00	..RING, BACK UP	1	
7	6H1-43861-00-00	..O-RING	1	
8	93210-18322-00	..O-RING	1	
9	6H1-43871-10-00	..RING, BACK UP	1	
10	93210-65752-00	.O-RING	2	
11	6H1-43835-10-00	.PIPE	1	
12	6H1-43828-10-00	.BODY, RESERVOIR	1	
13	90386-18M14-00	.BUSH	2	
14	6E5-43818-00-00	.PIN, LOWER SHOCK MOUNT	1	
15	6H1-43833-10-00	.PIPE	1	
16	6H1-43834-00-00	.PIPE	1	
17	97395-06020-00	.BOLT, HEXAGON	6	
18	92995-06100-00	.WASHER, SPRING	6	
19	6H1-43829-00-00	.PLUG, RESERVOIR	1	
20	93210-09350-00	.O-RING	2	
21	93210-06519-00	.O-RING	3	
22	6T4-43802-00-00	.VALVE SUB ASSEMBLY	2	
23	6H1-43866-00-00	..O-RING	1	
24	6H1-43867-00-00	..O-RING	1	
25	6H1-43841-10-00	.PISTON, SHUTTLE	1	
26	6H1-43856-10-00	.SPRING, DOWN RELIEF	1	
27	6H1-43844-10-00	.PIN, VALVE SUPPORT	2	
28	6H1-4384G-11-00	.SEAL, RELIEF VALVE	1	
29	61A-4384F-00-00	.SEAL, MAIN VALVE	1	
30	6H1-43817-01-00	.FILTER 2	1	
31	6H1-43831-10-00	.CONNECTOR, SHAFT	1	
32	6H1-43830-11-00	.GEAR PUMP ASSY	1	
33	6H1-43847-00-00	.SEAT, MANUAL VALVE	2	
34	6H1-43899-00-00	.SPRING, MANUAL RELEASE	1	
35	6H1-4382A-10-00	.ADAPTOR 1	1	
36	6H1-43854-00-00	.SPRING, MANUAL RELEASE	1	
37	93210-10M74-00	.O-RING	1	
38	6H1-43845-01-00	.SCREW, MANUAL RELEASE	1	
39	93210-18M75-00	.O-RING	1	
40	6H1-43875-00-00	.RING, SNAP	1	
41	6H1-43822-10-00	.SEAL, TRIM DUST	2	
42	6H1-43821-11-00	.SCREW, TRIM CYLINDER END	2	
43	6H1-43861-10-00	.O-RING	2	
44	6H1-4384E-20-00	.SPRING, TRIM	1	
45	98580-05010-00	.SCREW, PAN HEAD	2	
46	92990-05200-00	.WASHER, PLAIN	2	
47	6H1-43820-11-00	.TRIM PISTON SUB ASSY	2	
48	6H1-43864-00-00	..O-RING	1	
49	91316-08016-00	..BOLT, SOCKET HEAD	1	
50	6H1-43874-00-00	..RING, BACK UP	1	
51	6H1-43816-00-00	.FILTER 1	1	
52	6H1-43896-00-00	.O-RING	1	
53	6H1-43895-11-00	.SEAT, RELIEF VALVE	1	

54	6H1-43855-11-00	.SPRING, UP RELIEF	1	
55	6H1-43843-11-00	.SCREW, VALVE LOCK	1	
56	6H1-4388E-11-00	.PLUG, TAPER SCREW	1	
57	6H1-43868-00-00	.O-RING	1	
58	98511-04025-00	.SCREW, PAN HEAD	4	
59	92901-04100-00	.WASHER, SPRING	4	
60	6H1-4387J-00-00	.WASHER, SPECIAL 2	1	
61	6H1-4385H-00-00	.SPRING, SEAL	2	
62	93505-32038-00	.BALL	2	

Part Notes

C85TLRQ 1992 / POWER TRIM TILT ASSEMBLY

PART NUMBER		NOTE TEXT
6H1-43861-10-00		OEM: This part number is among the Top 100 Most Popular Marine Maintenance Parts as of March 2014.
6H1-43861-10-00		OEM: This part number is among the Top 100 Most Popular Marine Maintenance Parts as of March 2014.

©2014 Yamaha Motor Corporation, U.S.A. All rights reserved.

C85TLRQ 1992 / CONTROL ENGINE

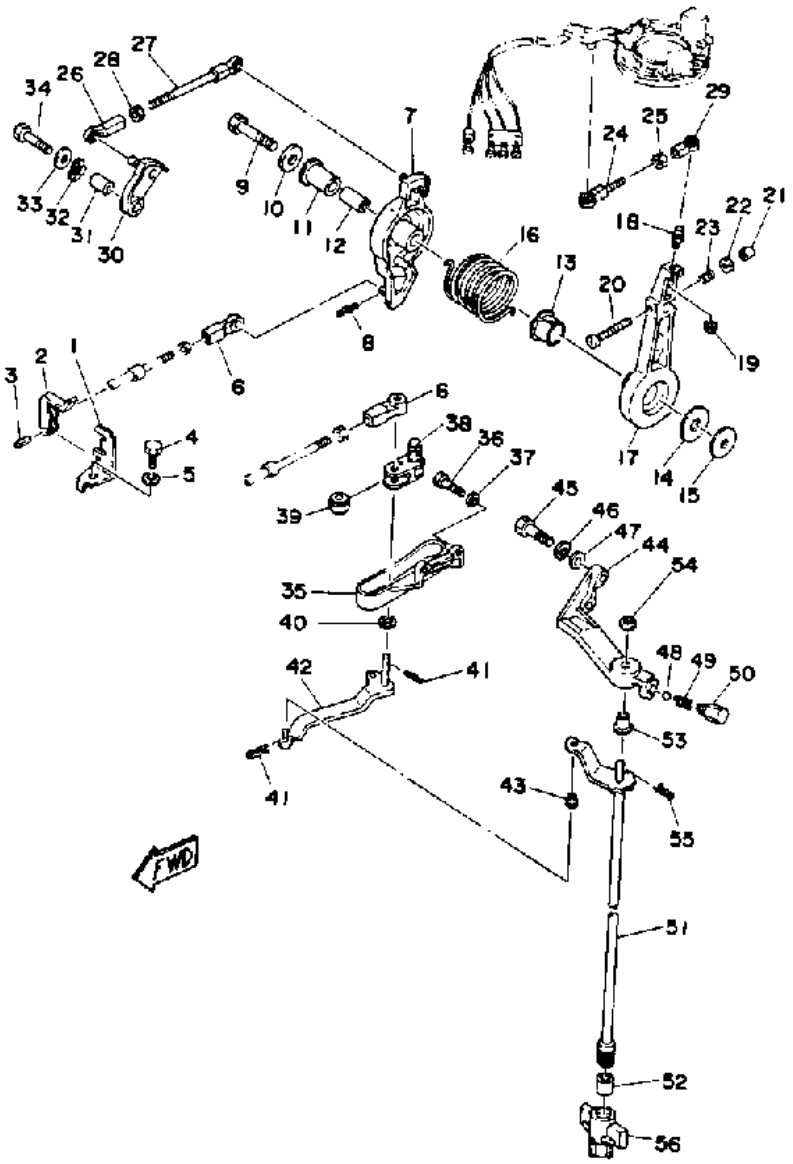

©2014 Yamaha Motor Corporation, U.S.A. All rights reserved.

Part List

C85TLRQ 1992 / CONTROL ENGINE

REF - NO	PART NUMBER	PART NAME	QUANTITY	REMARKS
1	663-48531-00-00	BRACKET, REMOTE CONTROL	1	
2	663-48538-00-00	CLAMP, CABLE 1	1	
3	91690-30012-00	.PIN, SPRING	1	
4	97313-08016-00	BOLT, HEXAGON	1	
5	92990-08100-00	WASHER, SPRING	1	
6	663-48344-00-00	.CABLE END, REMOTE CONTROL	2	
7	688-41632-01-94	LEVER, MAGNETO CONTROL	1	
8	90468-18008-00	CLIP	1	
9	97313-08045-00	BOLT, HEXAGON	1	
10	90201-08M54-00	WASHER, PLATE	1	
11	90386-12089-00	BUSH	1	
12	90387-08M16-00	COLLAR	1	
13	90386-22M13-00	BUSH	1	
14	90202-12092-00	WASHER, PLATE	1	
15	90201-08M13-00	WASHER, PLATE	1	
16	90508-29M05-00	SPRING, TORSION	1	
17	688-41631-01-94	LEVER, MAGNETO CONTROL	1	
18	663-85518-00-00	JOINT, BALL	1	
19	95303-05700-00	.NUT	1	
20	90157-06M11-00	SCREW, PAN HEAD	1	
21	688-44194-00-00	CAP	1	
22	95380-06600-00	NUT, HEXAGON	1	
23	90501-16M12-00	SPRING, COMPRESSION	1	
24	682-41237-50-00	JOINT, LINK	2	
25	95380-05600-00	NUT	1	
26	(6H2-41237-00-00)	JOINT, LINK	1	
27	688-41211-01-00	LINK, ACCEL.	1	
28	95380-05600-00	NUT	1	
29	682-41237-00-00	JOINT, LINK	1	
30	688-41213-00-00	CAM, ACCEL.	1	
31	90387-06M17-00	COLLAR	1	
32	90206-10M04-00	WASHER, WAVE	1	
33	90201-06M02-00	WASHER, PLATE	1	
34	97395-06035-00	BOLT, HEXAGON	1	
35	688-44117-00-94	BRACKET	1	
36	97313-06020-00	BOLT, HEXAGON	2	
37	92990-06600-00	WASHER, PLATE	2	
38	688-44124-00-00	LINK, SHIFT ROD	1	
39	688-44122-00-00	BUSHING, SHIFT ROD LEVER	1	
40	90202-07M07-00	WASHER, PLATE	1	
41	90468-18008-00	CLIP	3	
42	688-44121-01-00	LEVER, SHIFT ROD	1	
43	90386-06M12-00	BUSH	1	
44	688-44118-00-94	BRACKET	1	
45	97313-08030-00	BOLT	2	
46	92990-08100-00	WASHER, SPRING	2	
47	92990-08600-00	..WASHER, PLATE	2	
48	93501-04M02-00	BALL	1	
49	90501-12082-00	SPRING, COMPRESSION	1	
50	648-42715-00-00	BUSHING	1	
51	688-44120-11-00	HANDLE GEAR SHIFT ASSEMBLY	1	UR LONG
52	696-44147-00-00	BOOT, SHIFT ROD	1	

53	90386-08006-00	BUSH	1	
54	92990-08200-00	WASHER, PLAIN	1	
55	90468-18008-00	CLIP	1	
56	697-43662-00-00	GUIDE, REVERSE ROD	1	

Part Notes

C85TLRQ 1992 / CONTROL ENGINE

PART NUMBER		NOTE TEXT
90468-18008-00		OEM: This part number is among the Top 100 Most Popular Marine Maintenance Parts as of March 2014.
92990-06600-00		OEM: This part number is among the Top 100 Most Popular Marine Maintenance Parts as of March 2014.
90468-18008-00		OEM: This part number is among the Top 100 Most Popular Marine Maintenance Parts as of March 2014.
90468-18008-00		OEM: This part number is among the Top 100 Most Popular Marine Maintenance Parts as of March 2014.

©2014 Yamaha Motor Corporation, U.S.A. All rights reserved.

C85TLRQ 1992 / UPPER CASING

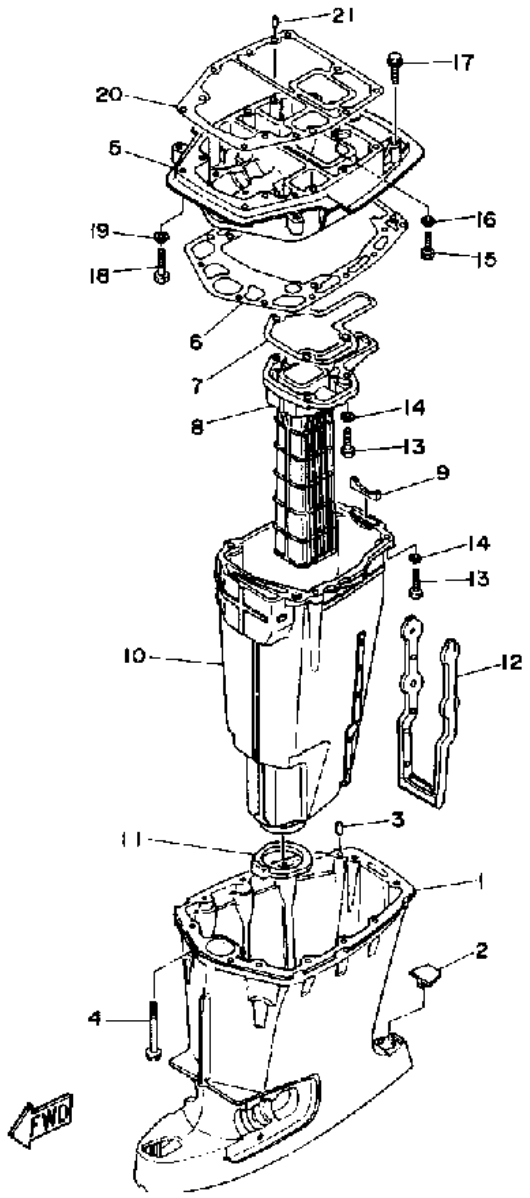

©2014 Yamaha Motor Corporation, U.S.A. All rights reserved.

Part List

C85TLRQ 1992 / UPPER CASING

REF - NO	PART NUMBER	PART NAME	QUANTITY	REMARKS
1	688-45111-03-EK	CASING, UPPER	1	
2	663-45155-10-00	CAP	1	
3	93606-12019-00	.PIN, DOWEL	2	
4	90119-08M80-00	BOLT, WITH WASHER	8	
5	688-41137-02-94	GUIDE, EXHAUST	1	
6	688-45114-A1-00	GASKET, UPPER CASING	1	
7	688-41134-A0-00	GASKET, EXHAUST MANIFOLD	1	
8	688-41131-00-5B	MANIFOLD, EXT. 1	1	
9	688-41133-00-00	GASKET, EXHAUST MANIFOLD 1	1	
10	688-14711-01-5B	MUFFLER 1	1	
11	688-45123-00-00	GASKET, MUFFLER	1	
12	663-14737-10-00	DAMPER, MUFFLER	1	
13	97395-08030-00	BOLT	7	
14	92990-08100-00	WASHER, SPRING	7	
15	97395-08025-00	BOLT	1	
16	92990-08100-00	WASHER, SPRING	1	
17	90119-08M79-00	BOLT, WITH WASHER	2	
18	97090-08035-00	BOLT	2	
19	92990-08100-00	WASHER, SPRING	2	
20	688-45113-A0-00	GASKET, UPPER CASING	1	
21	93606-12019-00	.PIN, DOWEL	2	

C85TLRQ 1992 / LOWER DRIVE 1

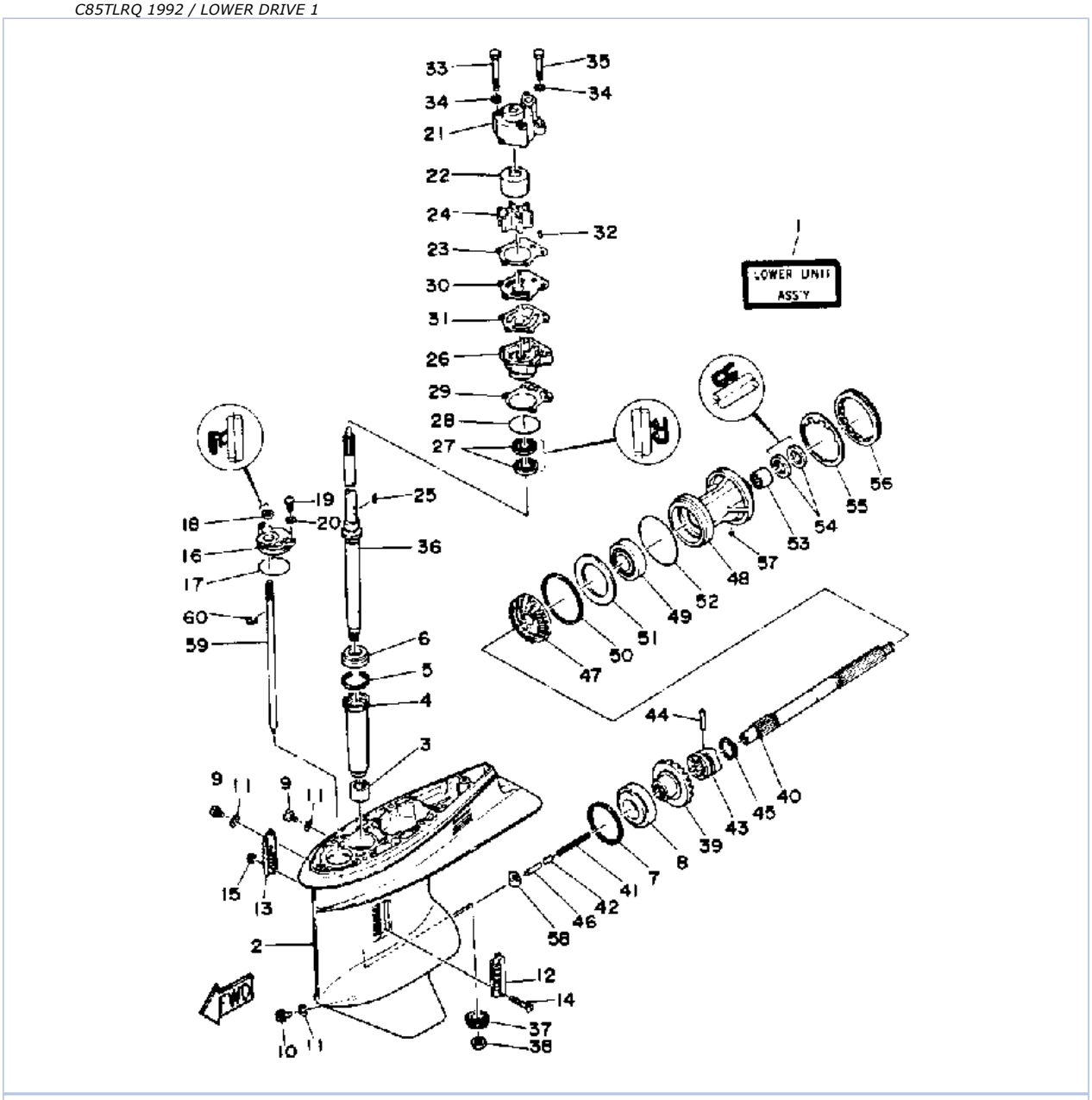

©2014 Yamaha Motor Corporation, U.S.A. All rights reserved.

Part List

C85TLRQ 1992 / LOWER DRIVE 1

REF - NO	PART NUMBER	PART NAME	QUANTITY	REMARKS
1	692-45300-12-EK	LOWER UNIT ASSEMBLY (REF. #2~60)	1	UR LONG
2	688-45311-04-EK	CASING, LOWER	1	
3	93315-325V1-00	BEARING	1	
4	688-45536-01-00	SLEEVE, DRIVE SHAFT	1	
5	688-45587-01-15	SHIM (T:0.15MM)	1	UR
5	688-45587-01-10	SHIM (T:0.10MM)	1	UR
5	688-45587-01-50	SHIM (T:0.50MM)	1	UR
5	688-45587-01-30	SHIM (T:0.30MM)	1	UR
5	688-45587-01-12	SHIM (T:0.12MM)	1	UR
5	688-45587-01-18	SHIM (T:0.18MM)	1	UR
5	688-45587-01-40	SHIM (T:0.40MM)	1	UR
6	93332-000U3-00	BEARING	1	
7	688-45567-01-30	SHIM (T:0.30MM)	1	UR
7	688-45567-01-50	SHIM (T:0.50MM)	1	UR
7	688-45567-01-12	SHIM (T:0.12MM)	1	UR
7	688-45567-01-10	SHIM (T:0.10MM)	1	UR
7	688-45567-01-15	SHIM (T:0.15MM)	1	UR
7	688-45567-01-18	SHIM (T:0.18MM)	1	UR
7	688-45567-01-40	SHIM (T:0.40MM)	1	UR
8	93332-000U5-00	BEARING	1	
9	90340-08M04-00	PLUG, STRAIGHT SCREW	2	
10	688-45341-00-00	PLUG, DRAIN	1	
11	90430-08020-00	.GASKET	3	
12	688-45214-02-00	COVER, WATER INLET 1	1	
13	688-45215-02-00	COVER, WATER INLET 2	1	
14	98680-05545-00	SCREW, OVAL HEAD	1	
15	90185-05002-00	NUT, NYLON	1	
16	688-45321-00-00	PLATE	1	
17	93210-49046-00	.O-RING	1	
18	93106-09014-00	.OIL SEAL	1	
19	97395-06016-00	BOLT, HEX	2	
20	92990-06600-00	WASHER, PLATE	2	
21	688-44311-01-00	HOUSING, WATER PUMP	1	
22	688-44322-00-00	INSERT, CARTRIDGE	1	
23	688-44315-A0-00	.GASKET, WATER PUMP	1	
24	688-44352-03-00	IMPELLER	1	
25	90280-04M04-00	.KEY, WOODRUFF	1	
26	688-44341-00-94	HOUSING, WATER PUMP	1	
27	93101-25M03-00	.OIL SEAL	2	
28	93210-46044-00	O-RING	1	
29	688-44316-A0-00	.GASKET, WATER PUMP	1	
30	688-44323-00-00	OUTER PLATE, CARTRIDGE	1	
31	688-44324-A0-00	.GASKET, CARTRIDGE	1	
32	93604-10M03-00	PIN, DOWEL	2	
33	97395-08070-00	BOLT	2	
34	90209-08M02-00	WASHER	4	
35	97395-08050-00	BOLT	2	
36	688-45501-11-00	DRIVE SHAFT COMP.	1	UR LONG
37	688-45551-01-00	PINION (13T)	1	
38	90170-16M01-00	NUT	1	
39	688-45560-00-00	GEAR 1 (26T)	1	
40	688-45611-00-00	SHAFT, PROPELLER	1	
41	90501-16233-00	SPRING, COMPRESSION	1	

42	688-45634-00-00	SLIDE, SHIFT	1	
43	688-45631-01-00	CLUTCH, DOG	1	
44	90250-07M02-00	PIN, STRAIGHT	1	
45	688-45633-00-00	RING, CROSS PIN	1	
46	688-45635-00-00	PLUNGER, SHIFT	1	
47	688-45571-01-00	GEAR	1	
48	688-45331-00-94	HOUSING, BEARING	1	
49	93306-207U0-00	.BEARING	1	
50	688-45577-01-50	SHIM (T:0.50MM)	1	UR
50	688-45577-01-30	SHIM (T:0.30MM)	1	UR
50	688-45577-01-10	SHIM (T:0.10MM)	1	UR
50	688-45571-01-12	UNAVAILABLE IN PRICE BOOK	1	UR
50	688-45577-01-40	SHIM (T:0.40MM)	1	UR
50	688-45577-01-18	SHIM (T:0.18MM)	1	UR
50	688-45577-01-15	SHIM (T:0.15MM)	1	UR
51	688-45576-00-00	WASHER, THRUST	1	
52	93210-85M97-00	O-RING	1	
53	93317-325U0-00	BEARING	1	
54	93101-25M03-00	.OIL SEAL	2	
55	688-45383-02-00	WASHER, CLAW	1	
56	688-45384-00-00	NUT	1	
57	90282-04010-00	KEY, STRAIGHT	1	
58	663-44151-00-00	CAM, SHIFT	1	
59	663-44144-01-00	ROD, SHIFT	1	
60	99001-08600-00	CIRCLIP	1	

Part Notes

C85TLRQ 1992 / LOWER DRIVE 1

PART NUMBER		NOTE TEXT
90430-08020-00		OEM: This part number is among the Top 100 Most Popular Marine Maintenance Parts as of March 2014.
93106-09014-00		OEM: This part number is among the Top 100 Most Popular Marine Maintenance Parts as of March 2014.
92990-06600-00		OEM: This part number is among the Top 100 Most Popular Marine Maintenance Parts as of March 2014.
688-44352-03-00		OEM: This part number is among the Top 100 Most Popular Marine Maintenance Parts as of March 2014.
93101-25M03-00		OEM: This part number is among the Top 100 Most Popular Marine Maintenance Parts as of March 2014.
93101-25M03-00		OEM: This part number is among the Top 100 Most Popular Marine Maintenance Parts as of March 2014.

©2014 Yamaha Motor Corporation, U.S.A. All rights reserved.

C85TLRQ 1992 / LOWER DRIVE 2

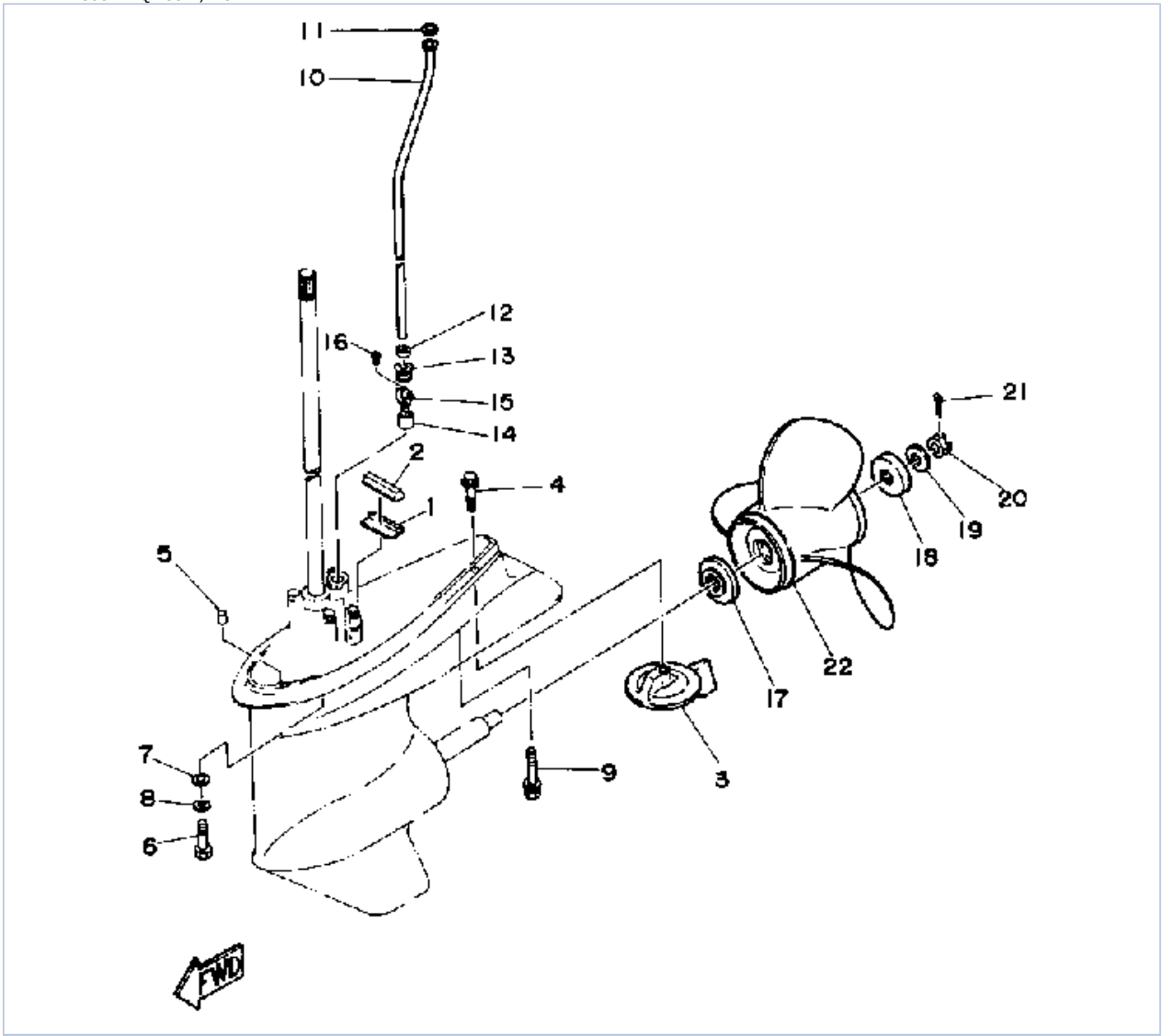

©2014 Yamaha Motor Corporation, U.S.A. All rights reserved.

Part List

C85TLRQ 1992 / LOWER DRIVE 2

REF - NO	PART NUMBER	PART NAME	QUANTITY	REMARKS
1	663-45376-00-94	GUIDE, SEAL DAMPER	1	
2	688-45375-00-00	DAMPER, SEAL	1	
3	688-45371-02-00	TAB-TRIM	1	
4	90105-10M00-00	BOLT, FLANGE	1	
5	93606-12019-00	.PIN, DOWEL	2	
6	97395-10040-00	BOLT	4	
7	92990-10600-00	WASHER, PLATE	4	
8	92990-10100-00	WASHER, SPRING	4	
9	90119-08M84-00	BOLT, WITH WASHER	1	
10	688-44361-10-00	TUBE, WATER	1	UR LONG
11	90202-12060-00	WASHER, PLATE	1	
12	90430-12072-00	GASKET	1	
13	663-44367-00-00	DAMPER, WATER SEAL 3	1	
14	663-44366-00-00	.DAMPER, WATER SEAL 2	1	
15	90480-19M06-00	GROMMET	1	
16	97780-40112-00	SCREW, TAPPING	2	
17	688-45987-01-00	SPACER 1	1	
18	688-45997-01-00	SPACER 2	1	
19	90201-17M00-00	WASHER, PLATE	1	
20	90171-16011-00	NUT, CASTLE	1	
21	91490-40030-00	PIN. COTTER	1	
22	688-45974-02-98	PROPELLER (3X13"X23"-K)	1	UR
22	688-45978-60-98	PROPELLER (3X13-1/2"X16"-K)	1	UR
22	688-45930-01-98	PROPELLER (3X13"X17"-K)	1	UR
22	688-45932-60-98	PROPELLER (3X13-1/2"X14"-K)	1	UR
22	6E5-45952-00-EL	PROPELLER (3X13"X23"-K)	1	UR
22	6E5-45954-00-EL	PROPELLER (3X14"X11"-K)	1	UR
22	688-45976-01-98	PROPELLER (3X13"X25"-K)	1	UR
22	6E5-45943-00-EL	PROPELLER (3X12-5/8"X21"-K)	1	UR
22	6E5-45941-00-EL	PROPELLER (3X13"X19"-K)	1	UR
22	688-45972-02-98	PROPELLER (3X13"X21"-K)	1	UR
22	688-45970-03-98	PROPELLER (3 X 13-1/2"" X 19"" -K) ()	1	UR
22	6E5-45945-01-EL	PROPELLER (3X13-1/4"X17"-K)	1	UR
22	6E5-45947-00-EL	PROPELLER (3X13-1/2"X15"-K)	1	UR
22	6E5-45949-00-EL	PROPELLER (3X13-5/8"X13"-K)	1	UR

Part Notes

C85TLRQ 1992 / LOWER DRIVE 2

PART NUMBER		NOTE TEXT
90105-10M00-00		OEM: This part number is among the Top 100 Most Popular Marine Maintenance Parts as of March 2014.
92990-10600-00		OEM: This part number is among the Top 100 Most Popular Marine Maintenance Parts as of March 2014.
688-45997-01-00		OEM: This part number is among the Top 100 Most Popular Marine Maintenance Parts as of March 2014.
91490-40030-00		OEM: This part number is among the Top 100 Most Popular Marine Maintenance Parts as of March 2014.

©2014 Yamaha Motor Corporation, U.S.A. All rights reserved.

C85TLRQ 1992 / MAGNETO

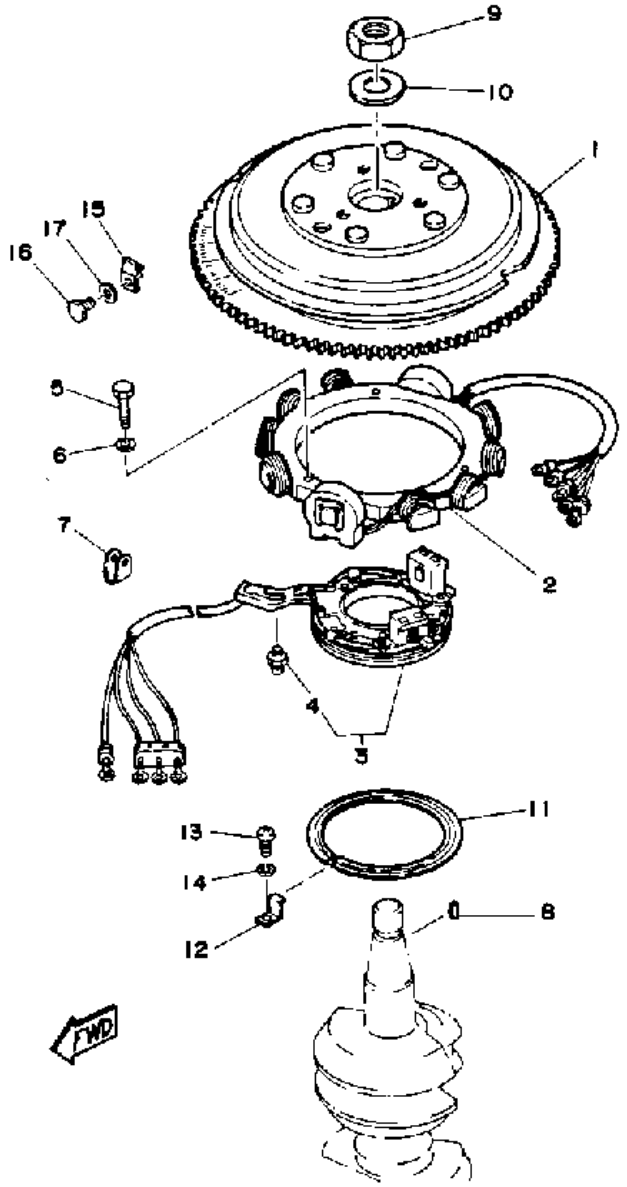

©2014 Yamaha Motor Corporation, U.S.A. All rights reserved.

Part List

C85TLRQ 1992 / MAGNETO

REF - NO	PART NUMBER	PART NAME	QUANTITY	REMARKS
1	688-85550-13-00	ROTOR ASSEMBLY	1	
2	688-85510-11-00	STATOR ASSEMBLY	1	
3	688-85580-12-00	COIL, PULSER	1	
4	663-85518-00-00	.JOINT, BALL	1	
5	97313-06025-00	BOLT	3	
6	92990-06600-00	WASHER, PLATE	3	
7	90464-12M00-00	CLAMP	1	
8	90280-05049-00	KEY, WOODRUFF	1	
9	90170-20137-00	NUT	1	
10	90201-21M18-00	WASHER, PLATE	1	
11	688-41611-00-00	RETAINER, MAGNETO BASE	1	
12	688-41612-00-00	RETAINER, MAGNETO BASE	3	
13	98580-06012-00	SCREW, PAN HEAD	3	
14	92995-06100-00	WASHER, SPRING	3	
15	688-81332-01-00	PLATE, TIMING	1	
16	97395-06010-00	BOLT	1	
17	92990-06600-00	WASHER, PLATE	1	

Part Notes

C85TLRQ 1992 / MAGNETO

PART NUMBER		NOTE TEXT
92990-06600-00		OEM: This part number is among the Top 100 Most Popular Marine Maintenance Parts as of March 2014.
92990-06600-00		OEM: This part number is among the Top 100 Most Popular Marine Maintenance Parts as of March 2014.

©2014 Yamaha Motor Corporation, U.S.A. All rights reserved.

C85TLRQ 1992 / STARTING MOTOR

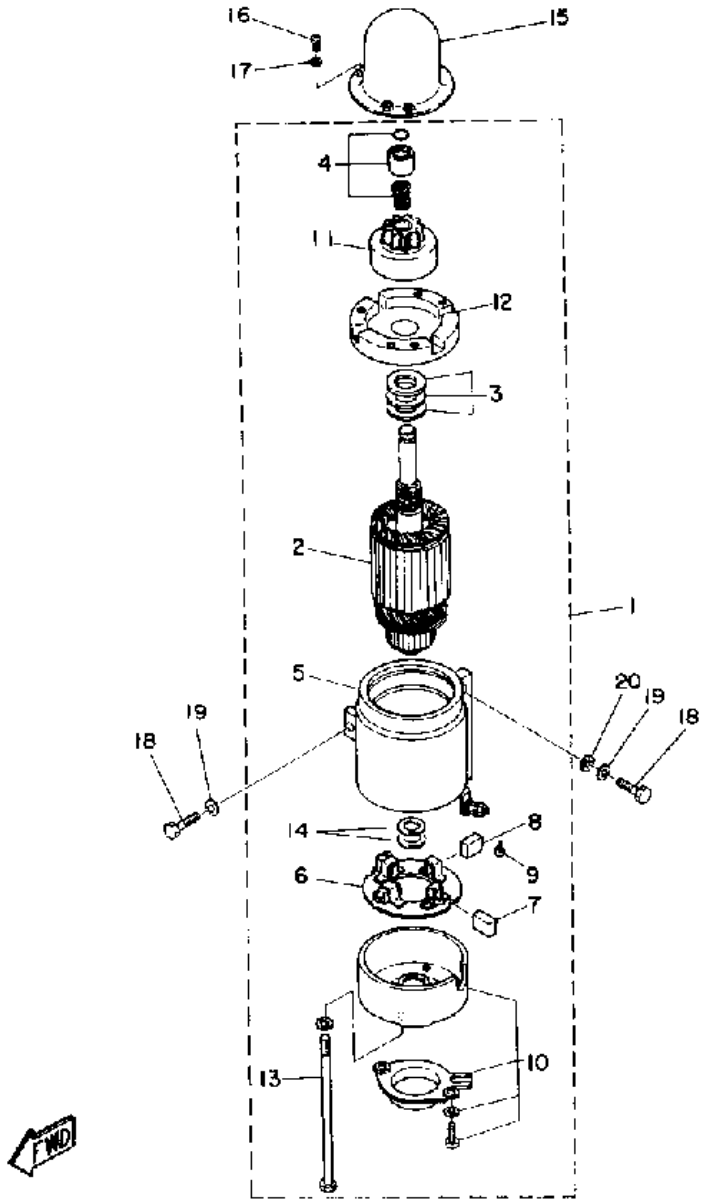

©2014 Yamaha Motor Corporation, U.S.A. All rights reserved.

Part List

C85TLRQ 1992 / STARTING MOTOR

REF - NO	PART NUMBER	PART NAME	QUANTITY	REMARKS
1	688-81800-12-00	STARTING MOTOR ASSY	1	
2	676-81850-11-00	.ARMATURE ASSY	1	
3	676-81809-10-00	.WASHER KIT	1	
4	676-81857-10-00	.PINION STOPPER SET	1	
5	688-81810-11-00	.STATOR ASSY	1	
6	663-81840-11-00	.BRUSH HOLDER ASSY	1	
7	663-81811-11-00	.BRUSH 1	2	
8	663-81812-11-00	.BRUSH 2	2	
9	663-81813-10-00	.SPRING, BRUSH	4	
10	663-81820-12-00	.REAR BRACKET ASSY	1	
11	663-81832-11-00	.PINION ASSY	1	
12	688-81830-11-00	.FRONT BRACKET ASSY	1	
13	663-81826-10-00	.BOLT	2	
14	688-81824-00-00	.WASHER 2	2	
15	688-81842-00-00	COVER	1	
16	98580-04010-00	.SCREW, PAN HEAD	3	
17	92990-04200-00	WASHER	3	
18	97313-08030-00	BOLT	3	
19	92990-08100-00	WASHER, SPRING	3	
20	92990-08600-00	..WASHER, PLATE	2	

C85TLRQ 1992 / ELECTRIC PARTS

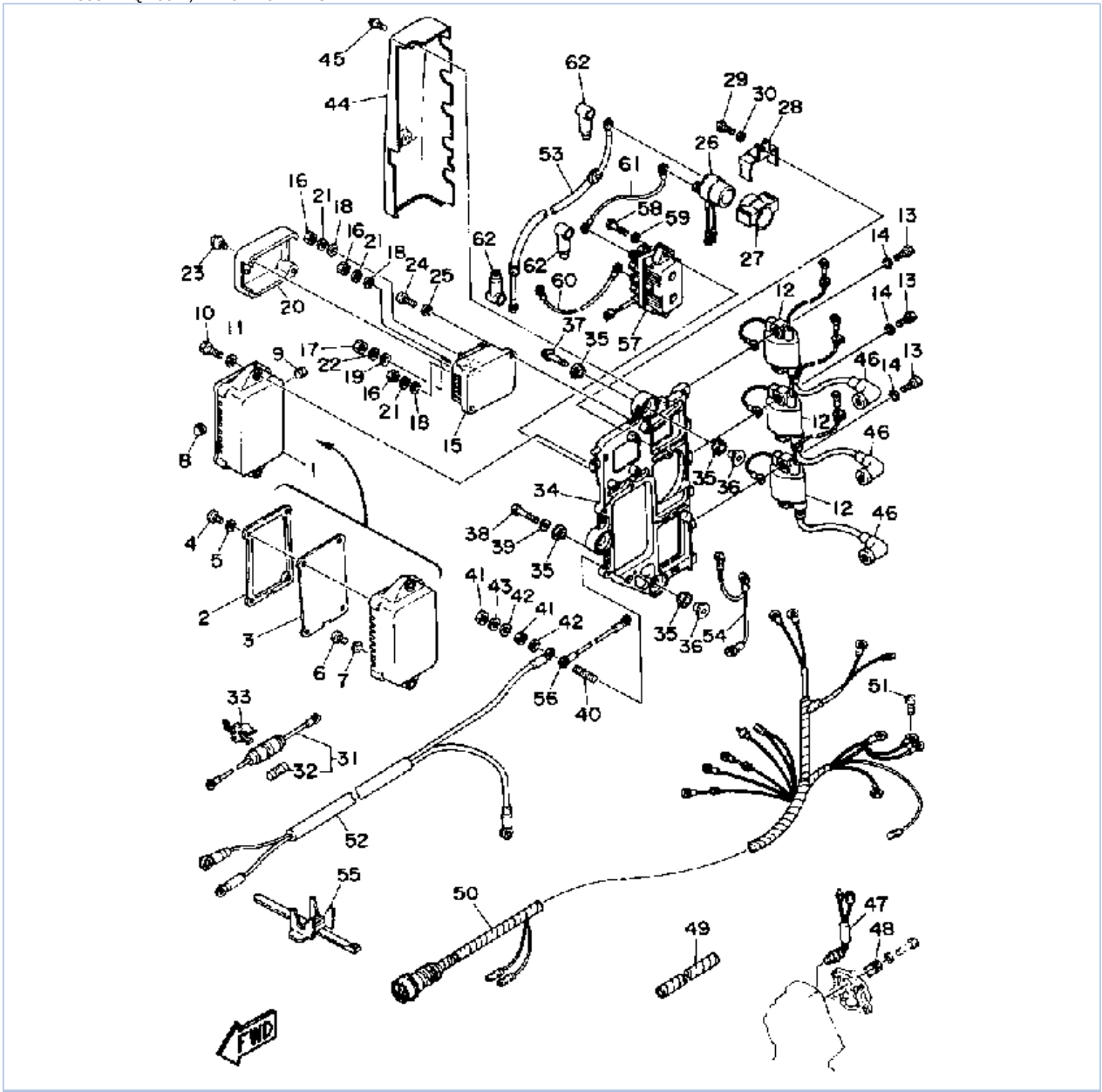

©2014 Yamaha Motor Corporation, U.S.A. All rights reserved.

Part List

C85TLRQ 1992 / ELECTRIC PARTS

REF - NO	PART NUMBER	PART NAME	QUANTITY	REMARKS
1	688-85540-16-00	C.D.I. UNIT ASSEMBLY	1	
2	688-85537-12-00	.COVER	1	
3	6E5-85547-10-00	.DAMPER	1	
4	98580-05010-00	.SCREW, PAN HEAD	4	
5	92990-05600-00	.WASHER, PLATE	4	
6	98580-04008-00	.SCREW, PAN HEAD	16	
7	92990-04200-00	.WASHER	16	
8	90480-06157-00	GROMMET	2	
9	663-81922-00-00	GROMMET	1	
10	97313-06025-00	BOLT	2	
11	92990-06600-00	WASHER, PLATE	2	
12	688-85570-11-00	IGNITION COIL ASSEMBLY	3	
13	97313-06025-00	BOLT	6	
14	92990-06600-00	WASHER, PLATE	6	
15	6G5-81960-A0-00	RECTIFIER & REGULATOR ASSY	1	
16	95380-05600-00	NUT	3	
17	95380-06600-00	NUT, HEXAGON	1	
18	92990-05200-00	.WASHER, PLAIN	3	
19	92990-06200-00	WASHER, PLAIN	1	
20	688-81961-01-00	COVER	1	
21	92990-05100-00	.WASHER, SPRING	3	
22	92995-06100-00	WASHER, SPRING	1	
23	97985-05225-00	SCREW, WITH WASHER	2	
24	97395-06020-00	BOLT, HEXAGON	2	
25	92990-06600-00	WASHER, PLATE	2	
26	6G1-81941-10-00	STARTER RELAY ASSY	1	
27	6G1-81952-00-00	HOLDER, RELAY	1	
28	6E9-81945-70-00	PLATE, SWITCH FITTING	1	
29	97313-06016-00	BOLT, HEXAGON	1	
30	92990-06600-00	WASHER, PLATE	1	
31	688-82150-01-00	FUSE HOLDER ASSEMBLY	1	
32	682-82151-00-00	.FUSE (12V-20A)	1	
33	6G5-82152-00-00	HOLDER, FUSE	1	
34	6H1-85542-00-94	BRACKET	1	
35	90480-09M25-00	GROMMET	6	
36	90387-06M03-00	COLLAR	3	
37	90119-06M75-00	BOLT, WITH WASHER	2	
38	90109-06M39-00	BOLT	1	
39	90201-06M31-00	.WASHER, PLATE	1	
40	90116-06M22-00	BOLT, STUD	1	
41	95380-06700-00	NUT	2	
42	92990-06200-00	WASHER, PLAIN	2	
43	92995-06100-00	WASHER, SPRING	1	
44	6H1-81916-00-00	COVER, TERMINAL	1	
45	90159-06M11-00	SCREW, WITH WASHER	2	
46	663-82370-01-00	PLUG CAP ASSY	3	
47	688-82560-10-00	THERMO SWITCH ASSY	1	
48	688-82588-01-00	PLATE	1	
49	90446-10M01-00	HOSE (L60)	1	
50	688-82590-15-00	WIRE HARNESS ASSEMBLY	1	UR 415962~ SEE NOTE
50	688-82590-14-00	WIRE HARNESS ASSEMBLY	1	UR ~415961 SEE NOTE
51	98580-06010-00	SCREW, PAN HEAD	1	UR ~415961 SEE NOTE
52	688-82105-02-00	BATTERY CABLE	1	

53	6H0-82117-00-00	WIRE, LEAD	1	
54	697-82519-00-00	WIRE, EARTH LEAD	1	
55	688-82594-00-00	CLAMP	1	
56	688-83354-00-00	WIRE, EARTH LEAD 1	1	
57	6H1-81950-00-00	RELAY ASSY	1	
58	97395-06025-00	BOLT	2	
59	92990-06600-00	WASHER, PLATE	2	
60	6H0-81949-10-00	WIRE, LEAD	1	
61	6H0-81949-01-00	WIRE, LEAD	1	
62	682-82119-01-00	COVER, LEAD WIRE	3	

Part Notes

C85TLRQ 1992 / ELECTRIC PARTS

PART NUMBER		NOTE TEXT
92990-06600-00		OEM: This part number is among the Top 100 Most Popular Marine Maintenance Parts as of March 2014.
92990-06600-00		OEM: This part number is among the Top 100 Most Popular Marine Maintenance Parts as of March 2014.
92990-06600-00		OEM: This part number is among the Top 100 Most Popular Marine Maintenance Parts as of March 2014.
92990-06600-00		OEM: This part number is among the Top 100 Most Popular Marine Maintenance Parts as of March 2014.
92990-06600-00		OEM: This part number is among the Top 100 Most Popular Marine Maintenance Parts as of March 2014.

©2014 Yamaha Motor Corporation, U.S.A. All rights reserved.

C85TLRQ 1992 / STEERING GUIDE ATTACHMENT

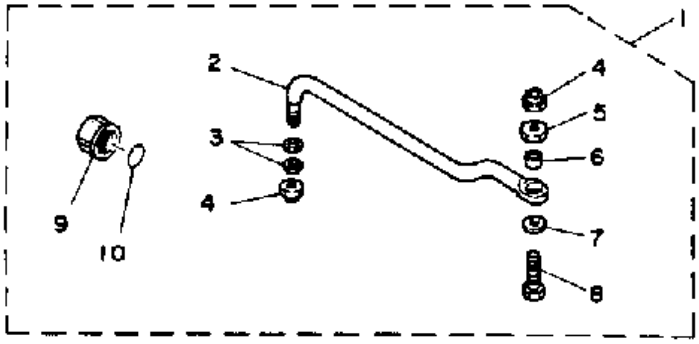

©2014 Yamaha Motor Corporation, U.S.A. All rights reserved.

Part List

C85TLRQ 1992 / STEERING GUIDE ATTACHMENT

REF - NO	PART NUMBER	PART NAME	QUANTITY	REMARKS
1	688-61350-10-00	STEERING GUIDE ATTACHMENT KIT	1	
2	688-61351-10-00	.ROD, STEERING LINK	1	
3	90201-10M20-00	.WASHER, PLATE	2	
4	90185-09M01-00	.NUT, SELF-LOCKING	2	
5	90170-09M03-00	.NUT	1	
6	90387-10M42-00	.COLLAR	1	
7	90201-10M63-00	.WASHER, PLATE	1	
8	6E5-61355-00-00	.BOLT	1	
9	6E5-43145-00-00	.CAP, CLAMP BRACKET	1	
10	93210-16275-00	.O-RING	1	

C85TLRQ 1992 / REPAIR KIT 1

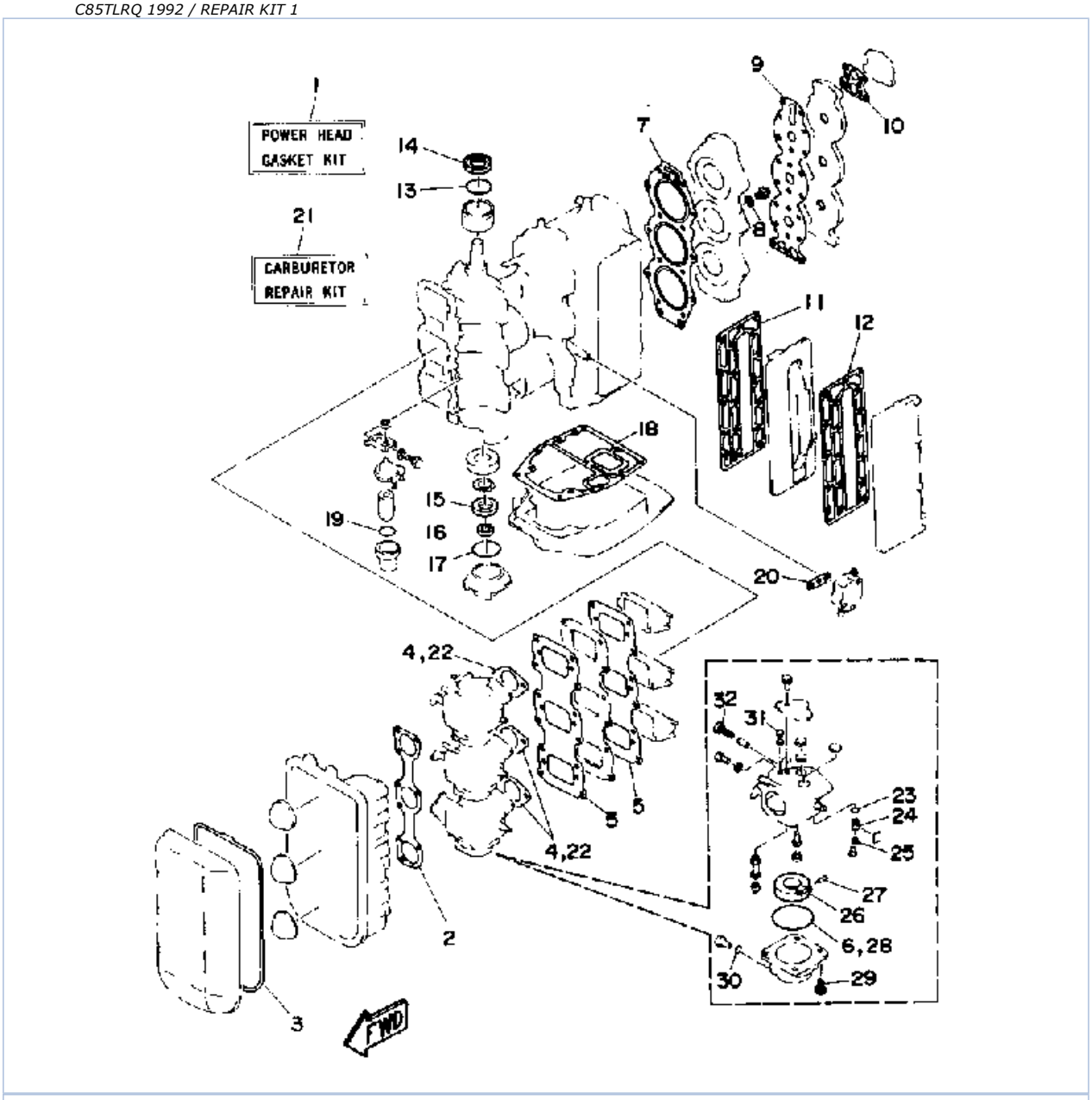

©2014 Yamaha Motor Corporation, U.S.A. All rights reserved.

Part List

C85TLRQ 1992 / REPAIR KIT 1

REF - NO	PART NUMBER	PART NAME	QUANTITY	REMARKS
1	688-W0001-01-00	GASKET KITKIT	1	
2	688-14483-A0-00	.GASKET	1	
3	688-14416-00-00	.GASKET, AIR CLEANER	1	
4	688-14198-A1-00	.GASKET	3	
5	688-13621-A1-00	.GASKET, VALVE SEAT	2	
6	676-14984-00-00	.GASKET, FLOAT CHAMBER	3	
7	688-11181-A0-00	.GASKET, CYLINDER HEAD 1	1	
8	90430-14115-00	.GASKET	1	
9	688-11193-A1-00	.GASKET, HEAD COVER 1	1	
10	688-12414-A1-00	.GASKET, COVER	1	
11	688-41112-A0-00	.GASKET, EXHAUST INNER COVER	1	
12	688-41114-A0-00	.GASKET, EXHAUST OUTER COVER	1	
13	93210-46M16-00	.O-RING	1	
14	93102-36M24-00	.OIL SEAL	1	
15	93102-30M05-00	.OIL SEAL	1	
16	93104-20M02-00	.OIL SEAL	1	
17	93210-62269-00	.O-RING	1	
18	688-45113-A0-00	.GASKET, UPPER CASING	1	
19	93210-37M25-00	.O-RING	1	
20	650-24431-A0-00	.GASKET, FUEL PUMP 1	1	
21	6H1-W0093-01-00	CARBURETOR REPAIR KIT	1	
22	688-14198-A1-00	.GASKET	3	
23	93210-04228-00	.O-RING	3	
24	692-14590-00-00	.VALVE SEAT	3	
25	676-14186-00-00	.PIN, FLOAT	3	
26	676-14985-01-00	.FLOAT	3	
27	688-14548-00-00	.PIN, FLOAT ARM	3	
28	676-14984-00-00	.GASKET, FLOAT CHAMBER	3	
29	97980-04114-00	.SCREW, WITH WASHER	3	
30	93210-04230-00	.O-RING	3	
31	663-14126-00-00	.GASKET	3	
32	692-14923-00-00	.SCREW, PILOT	3	

Part Notes

C85TLRQ 1992 / REPAIR KIT 1

PART NUMBER		NOTE TEXT
688-12414-A1-00		OEM: This part number is among the Top 100 Most Popular Marine Maintenance Parts as of March 2014.
650-24431-A0-00		OEM: This part number is among the Top 100 Most Popular Marine Maintenance Parts as of March 2014.

©2014 Yamaha Motor Corporation, U.S.A. All rights reserved.

C85TLRQ 1992 / REPAIR KIT 2

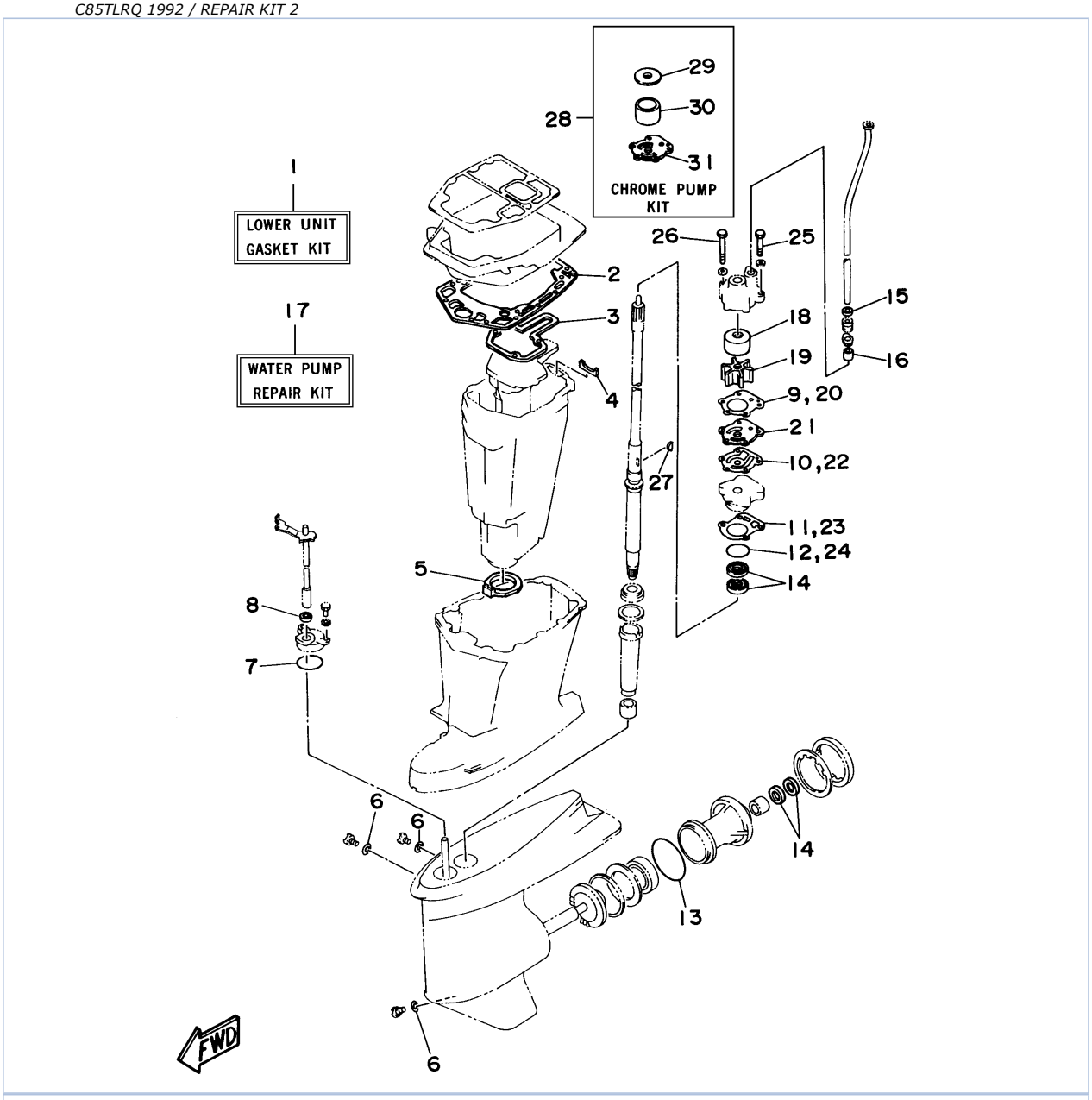

©2014 Yamaha Motor Corporation, U.S.A. All rights reserved.

Part List

C85TLRQ 1992 / REPAIR KIT 2

REF - NO	PART NUMBER	PART NAME	QUANTITY	REMARKS
1	688-W0001-21-00	LOWER UNIT GASKET KIT	1	
2	688-45114-A1-00	.GASKET, UPPER CASING	1	
3	688-41134-A0-00	.GASKET, EXHAUST MANIFOLD	1	
4	688-41133-00-00	.GASKET, EXHAUST MANIFOLD 1	1	
5	688-45123-00-00	.GASKET, MUFFLER	1	
6	90430-08020-00	.GASKET	3	
7	93210-49046-00	.O-RING	1	
8	93106-09014-00	.OIL SEAL	1	
9	688-44315-A0-00	.GASKET, WATER PUMP	1	
10	688-44324-A0-00	.GASKET, CARTRIDGE	1	
11	(688-44316-A1-00)	GASKET, WATER PUMP	1	
12	93210-46044-00	.O-RING	1	
13	93210-85M97-00	.O-RING	1	
14	93101-25M03-00	.OIL SEAL	2	
15	90430-12072-00	.GASKET	1	
16	663-44366-00-00	.DAMPER, WATER SEAL 2	1	
17	692-W0078-01-00	WATER PUMP REPAIR KIT	1	
18	688-44322-00-00	.INSERT, CARTRIDGE	1	
19	688-44352-03-00	.IMPELLER	1	
20	688-44315-A0-00	..GASKET, WATER PUMP	1	
21	688-44323-00-00	.OUTER PLATE, CARTRIDGE	1	
22	688-44324-A0-00	..GASKET, CARTRIDGE	1	
23	688-44316-A0-00	..GASKET, WATER PUMP	1	
24	93210-46044-00	.O-RING	1	
25	97395-08050-00	.BOLT	2	
26	97395-08070-00	.BOLT	2	
27	90280-04M04-00	..KEY, WOODRUFF	1	
28	688-W0078-1A-00	CHROME PUMP KIT	1	
29	688-44321-41-00	.INSERT, CARTRIDGE	1	
30	688-44322-41-00	.INSERT, CARTRIDGE	1	
31	688-44323-40-00	.OUTER PLATE, CARTRIDGE	1	

Part Notes

C85TLRQ 1992 / REPAIR KIT 2

PART NUMBER		NOTE TEXT
90430-08020-00		OEM: This part number is among the Top 100 Most Popular Marine Maintenance Parts as of March 2014.
93106-09014-00		OEM: This part number is among the Top 100 Most Popular Marine Maintenance Parts as of March 2014.
93101-25M03-00		OEM: This part number is among the Top 100 Most Popular Marine Maintenance Parts as of March 2014.
688-44352-03-00		OEM: This part number is among the Top 100 Most Popular Marine Maintenance Parts as of March 2014.

©2014 Yamaha Motor Corporation, U.S.A. All rights reserved.

©2014 Yamaha Motor Corporation, U.S.A. All rights reserved.