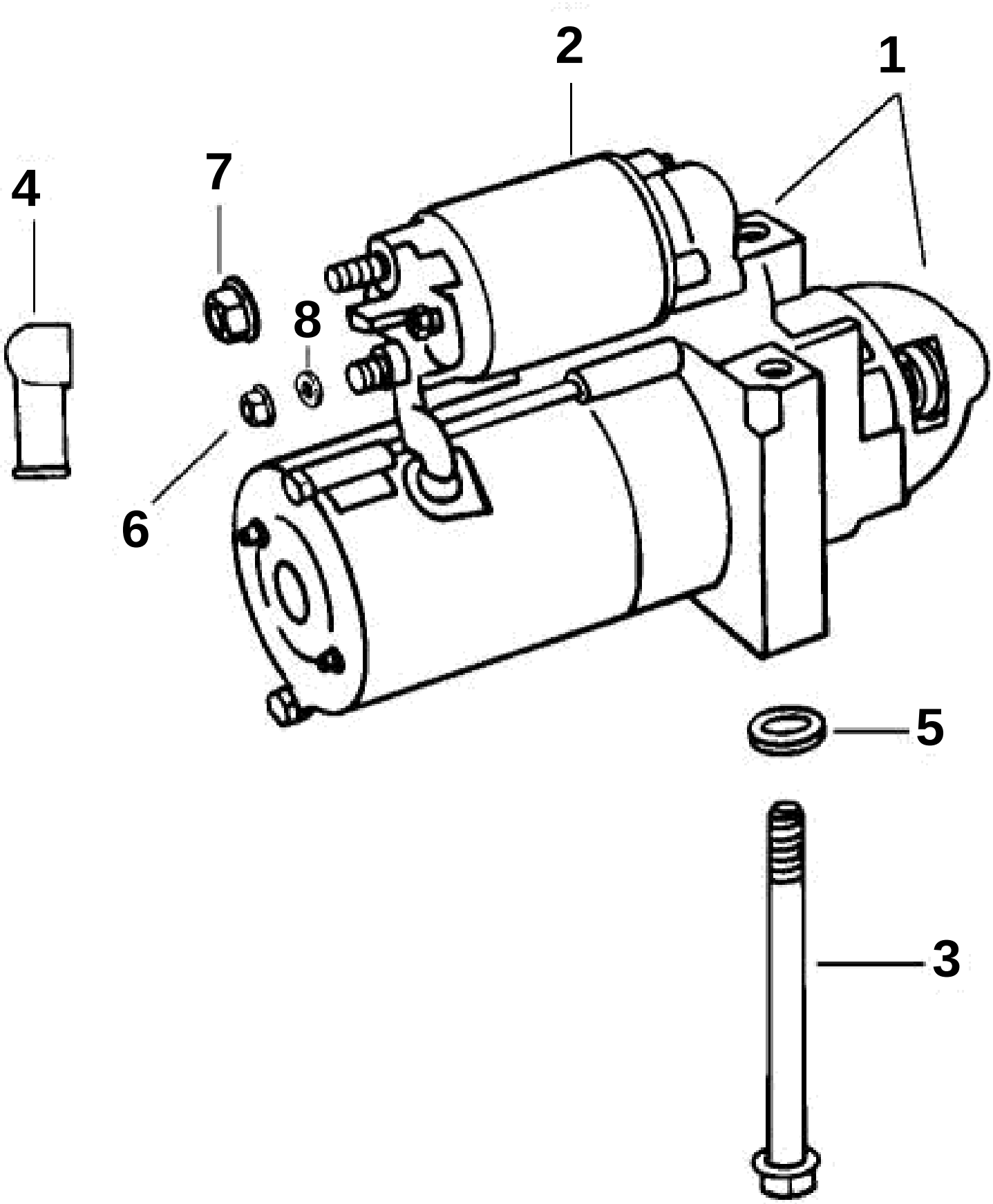
2
1
4
7
8
6
5
3

STARTER MOTOR

REF	PART NO.	QTY	DESCRIPTION	NOTES
1	3856004	1	Starter motor, Engine	
2	3850216	1	· Solenoid	
3	3854752	2	· Screw, Starter motor to engine	
4	3852487	1	· Protective cap, Battery cable	
5	3854496	2	· Washer, Screw, starter motor to engine block	
6	3852518	2	· Nut, Starter motor solenoid	
7	3853714	2	· Nut, Starter motor solenoid	
8	3852520	1	· Washer, Stud, starter motor solenoid	PNCS only
	3852053	2	· Screw, Starter solenoid clamp to cylinder block	Not shown; PNCS only