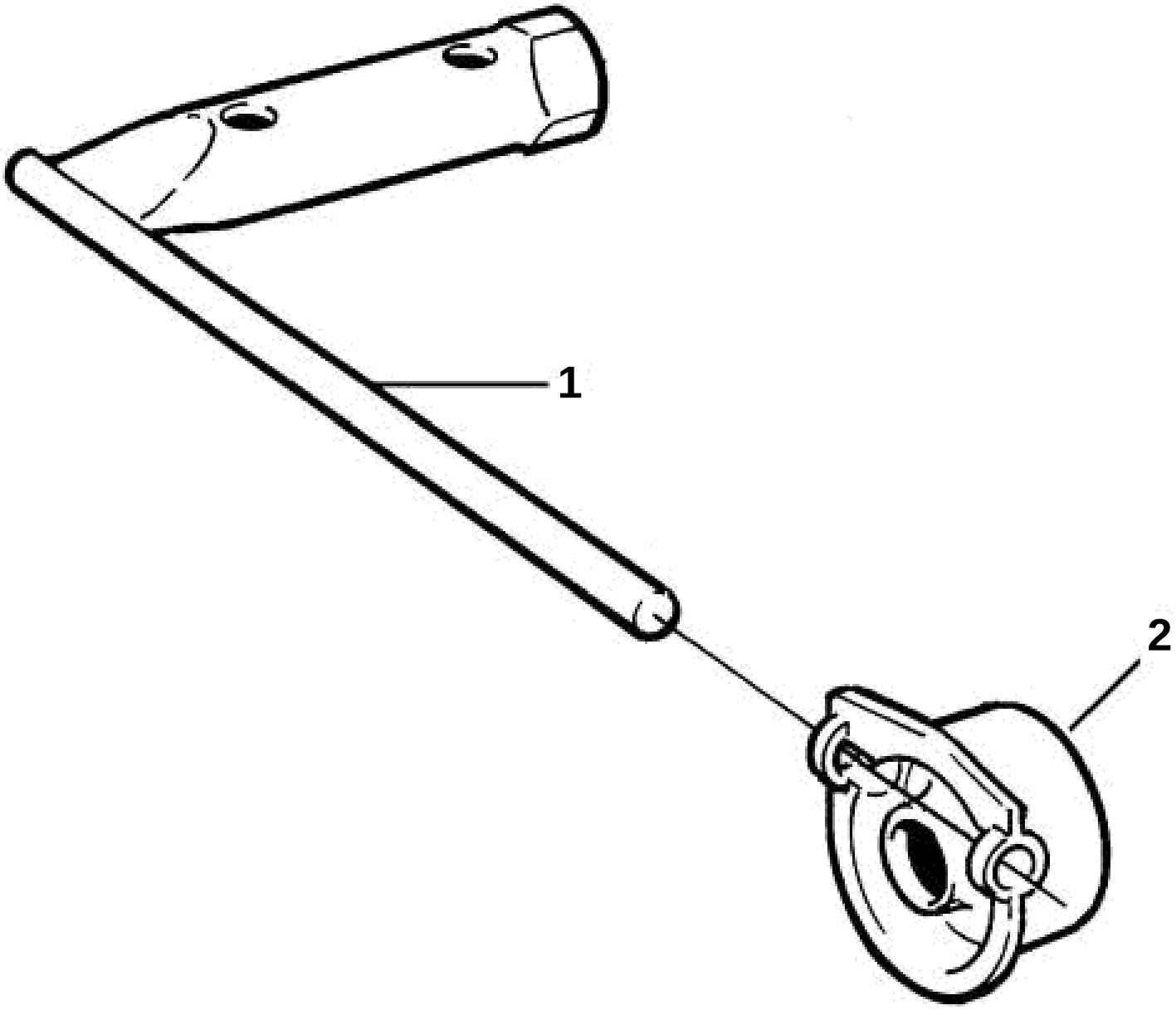
1
2

PROPELLER TOOL KIT

REF	PART NO.	QTY	DESCRIPTION
	873058	1	Tool kit, DP
1	872821	1	· Tool
2	873047	1	· Sleeve