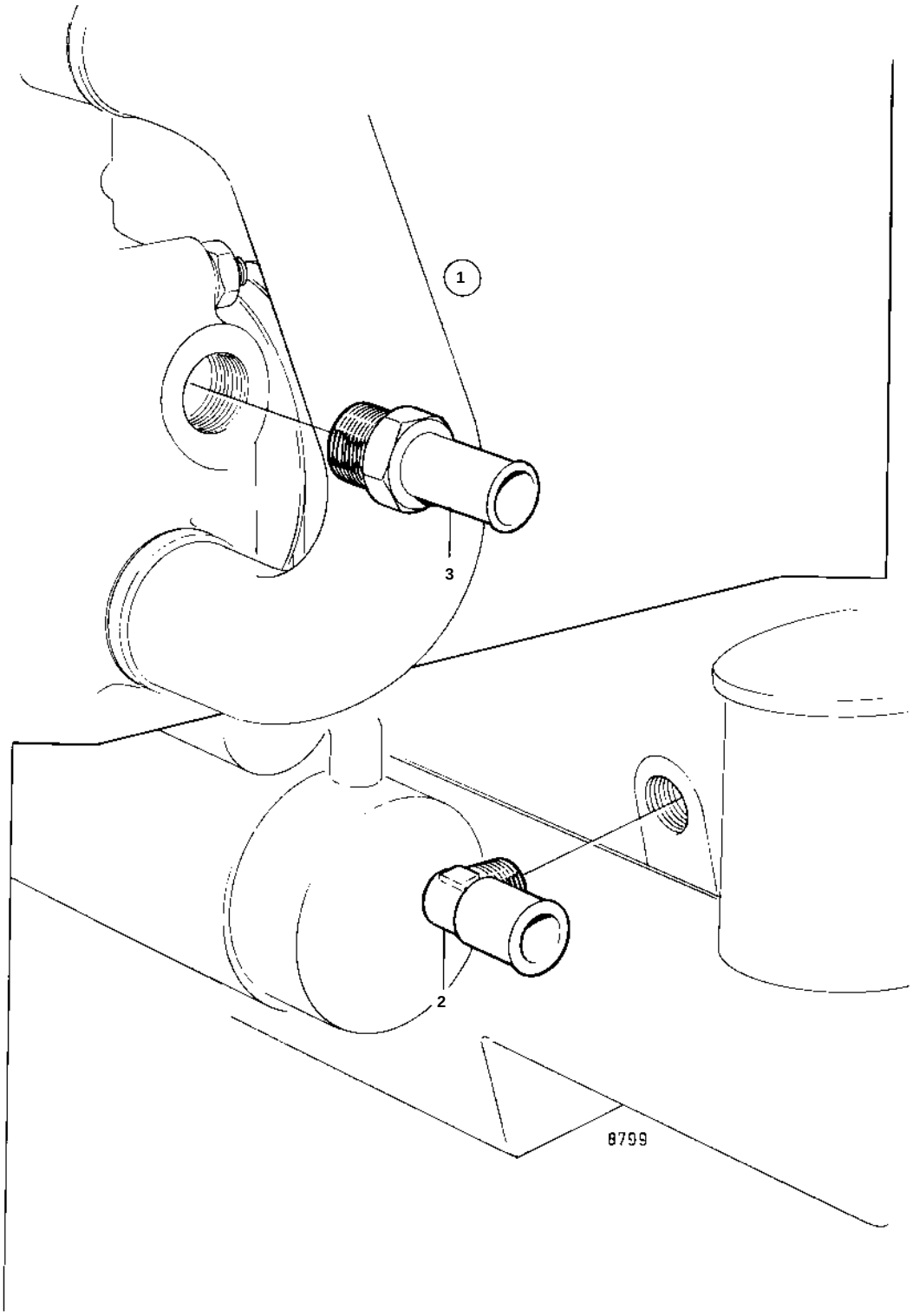
1
3
2
8799

REF	PART NO.	QTY	DESCRIPTION		NOTES
1	855876	1	Hot water outlet		
2	856483	1	· Hose nipple		(945341)
3	961657	1	· Nipple		