AQ231A,AQ231B

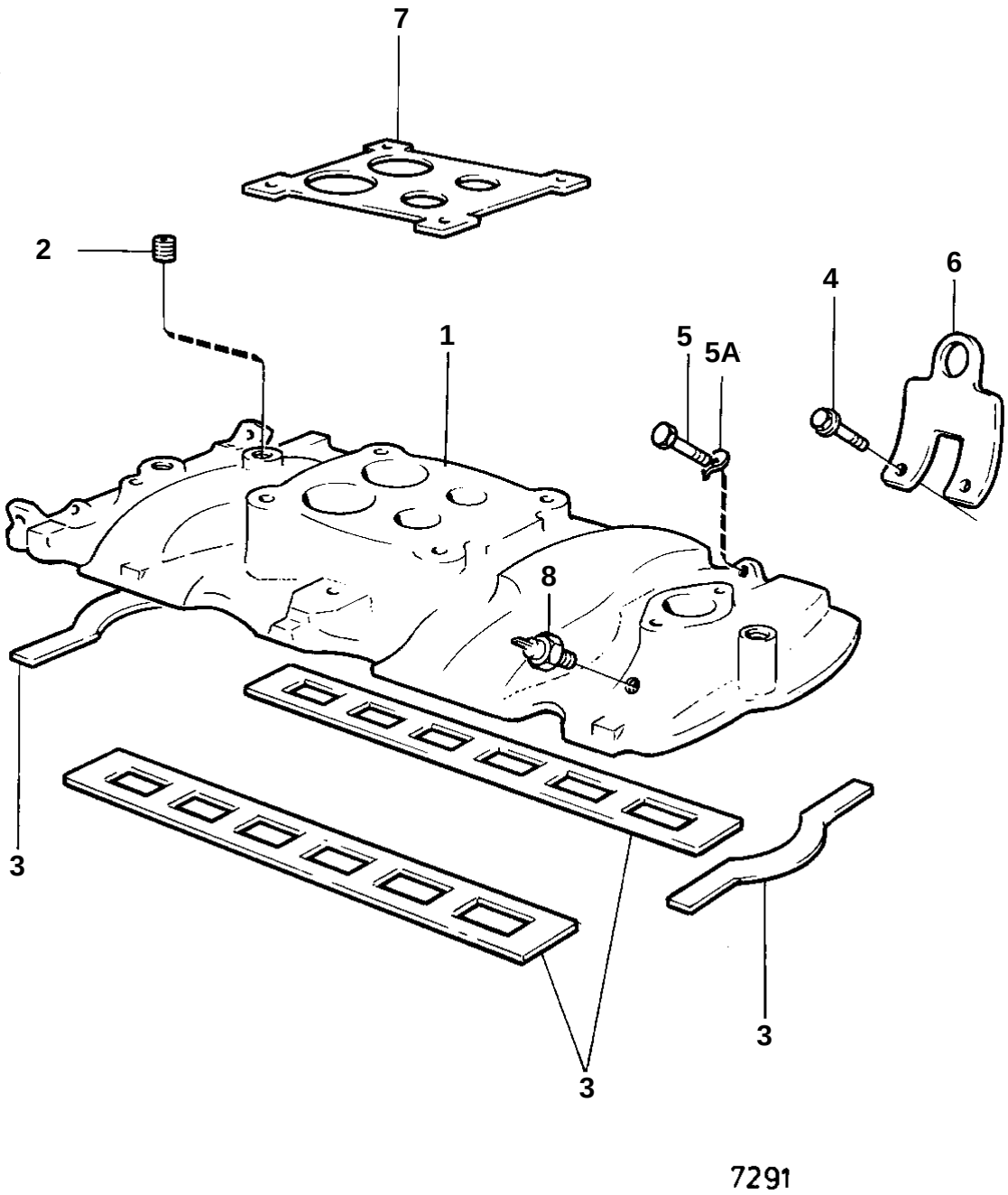

AQ231A,AQ231B

REF	PART NO.	QTY	DESCRIPTION		NOTES
1	856076	1	Inlet pipe		
2	968145	1	Plug		(952357)
3	856067	2	Gasket	IK	REPLACED BY GASKET KIT 856365.
4	855597	4	Screw		
5	855824	8	Screw		
5A	941907	9	Spring washer		
6		1	LIFTING EYE		
7	856033	1	Gasket	IK	(826479) SEE GROUP 2C
8	835630	1	Temperature sensor		SEE GROUP 3
	841261	X	Sealant	IK	SEE GROUP 9