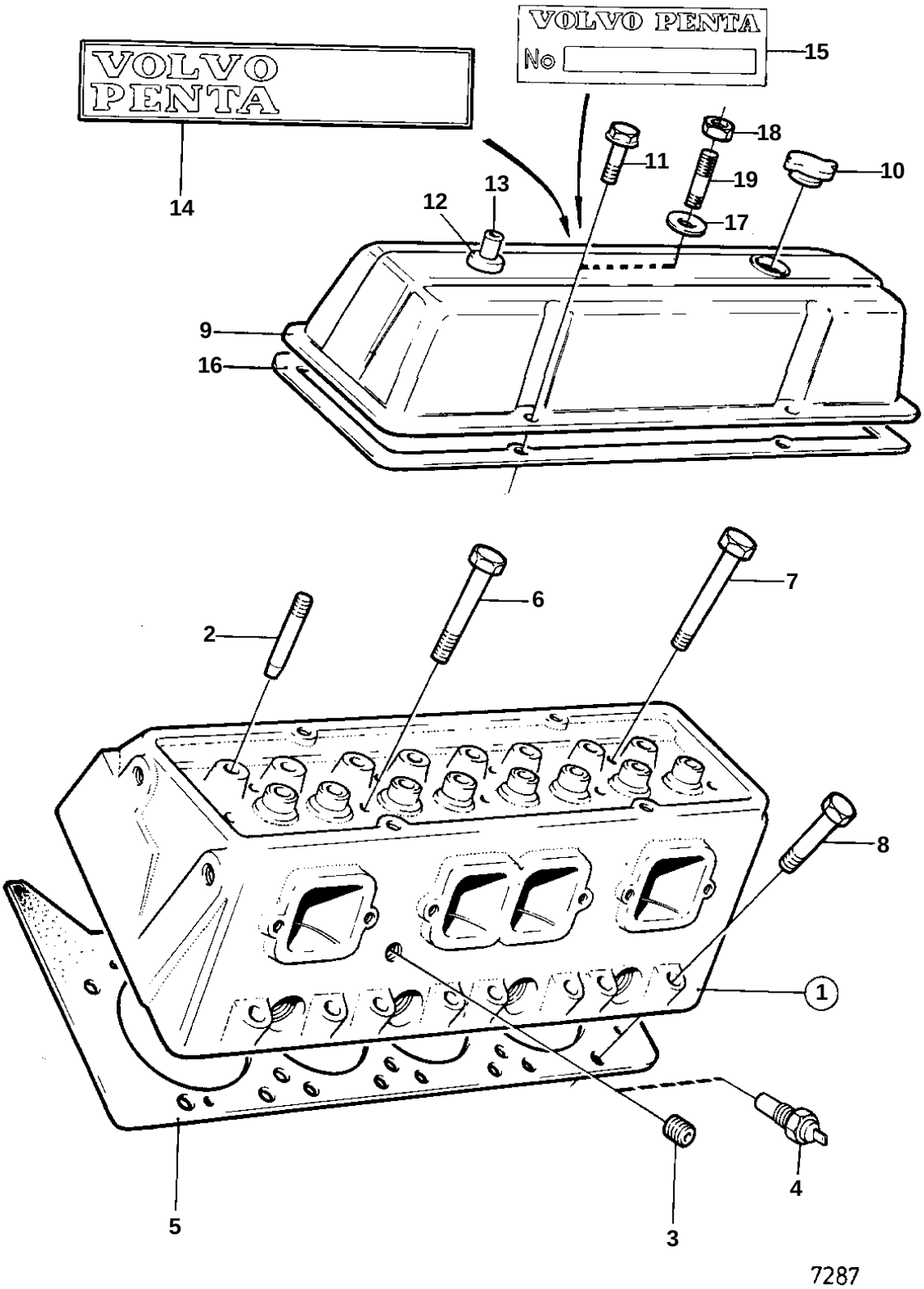
VOLVO PENTA
VOLVO PENTA
No
15
14
18
11
19
10
13
12
17
9
16
7
6
2
8
1
5
3
4
7287

REF	PART NO.	QTY	DESCRIPTION		SEE SEC.	NOTES
1	841869	2	Cylinder head			
2	835108	16	· Stud		02A-0475	
3	968145	1	Plug			(952357). BB225B MO20394-, BB260B MO20364-.
4	841890	1	Switch			BB225B MO20394-, BB260B MO20364-.
5	841207	2	Gasket	IK		
6	835077	14	Screw			
7	835079	4	Screw			
8	835078	16	Screw			
9	841868	2	Valve cover			
10	818620	2	Filler cap			
11	841426	8	Screw			
12	835415	2	Sleeve			SEE GROUP 2C
13	841546	2	Hose attachment			SEE GROUP 2C
14	855899	2	Decal			
15		1	ENGINE NUMBER DECAL			