BB225C

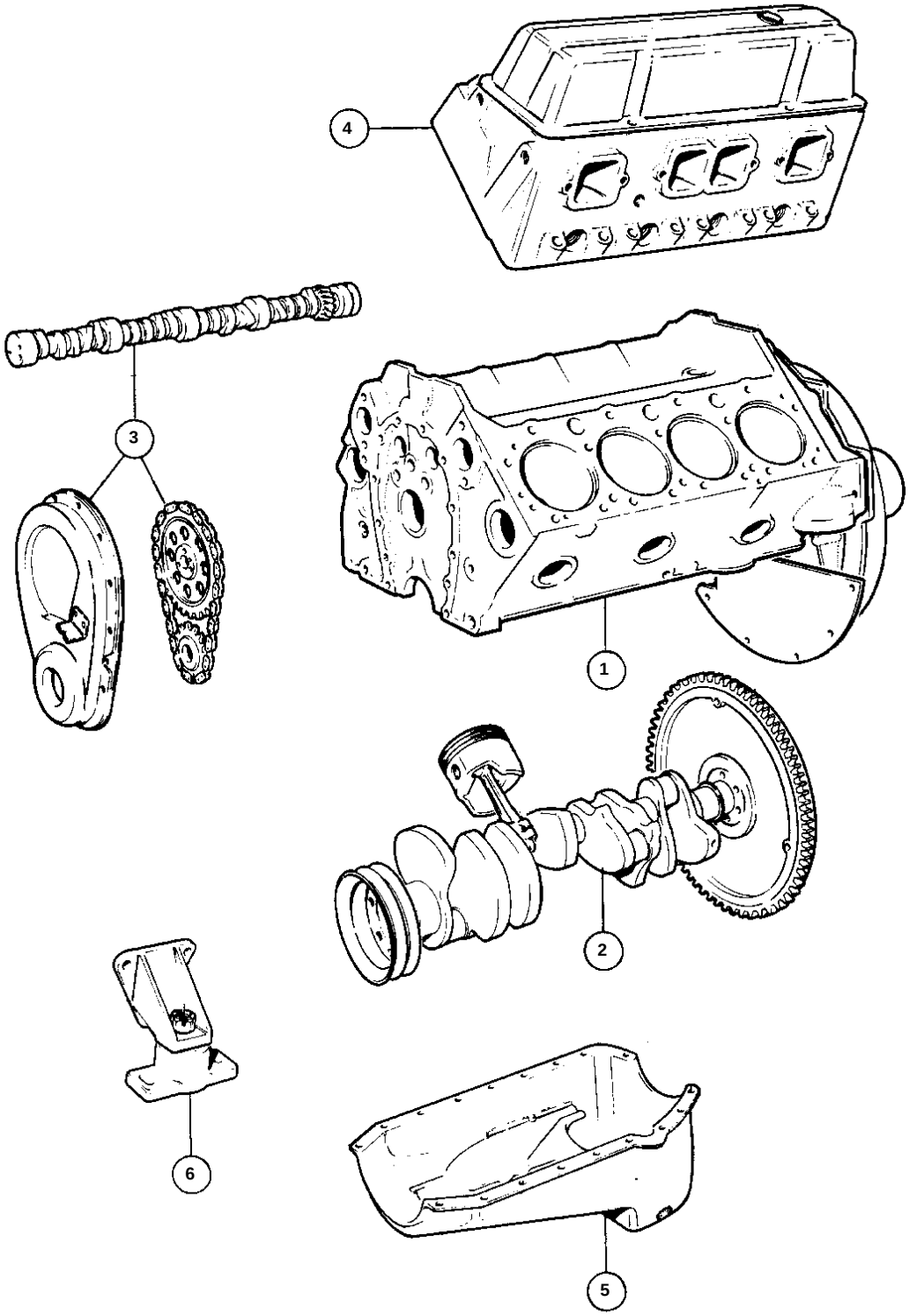


5515

**BB225C**

| REF | QTY | DESCRIPTION | SEE SEC. |
|---|---|---|---|
| 1 | 1 | CYLINDER BLOCK AND FLYWHEEL COVER | |
| 2 | 1 | CRANKSHAFT AND RELATED PARTS | |
| 3 | 1 | CAMSHAFT AND VALVE MECHANISM | |
| 4 | 1 | CYLINDER HEAD | 17191 |
| 5 | 1 | LUBRICATING SYSTEM | 17196 |
| 6 | 1 | ENGINE MOUNTS | 17200 |