WATER HEATER AND INSTALLATION COMPONENTS: 1144069

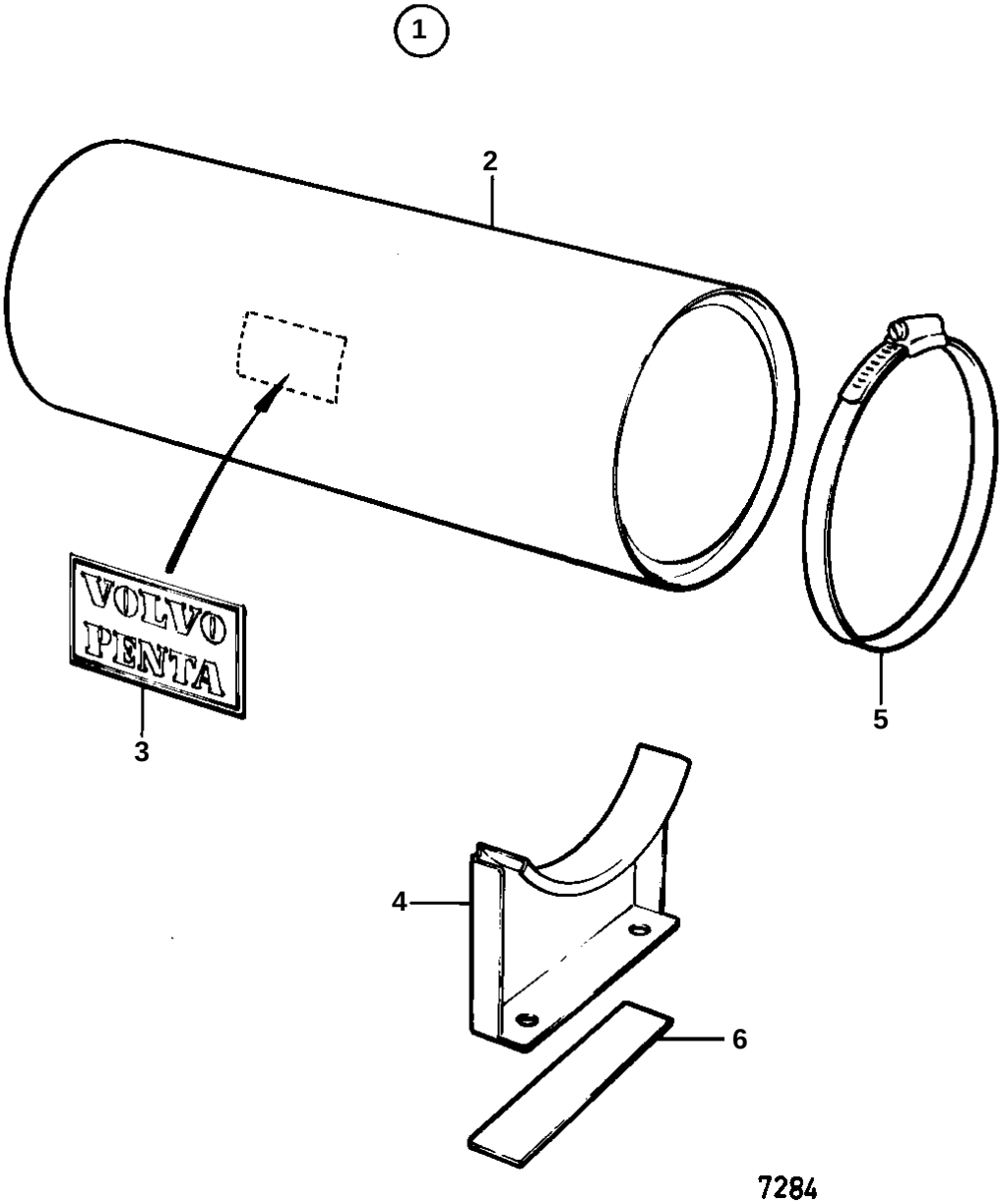

REF	PART NO.	QTY	DESCRIPTION
1		1	Water heater
2		1	· CONTAINER
3	827259	1	· Decal
4	842767	2	· Bracket
5		2	· Hose clamp
6		2	· Spacer