TANK METER KIT FOR FUEL AND DRINKING WATER, EARLIER PROD: 834400

COMMON

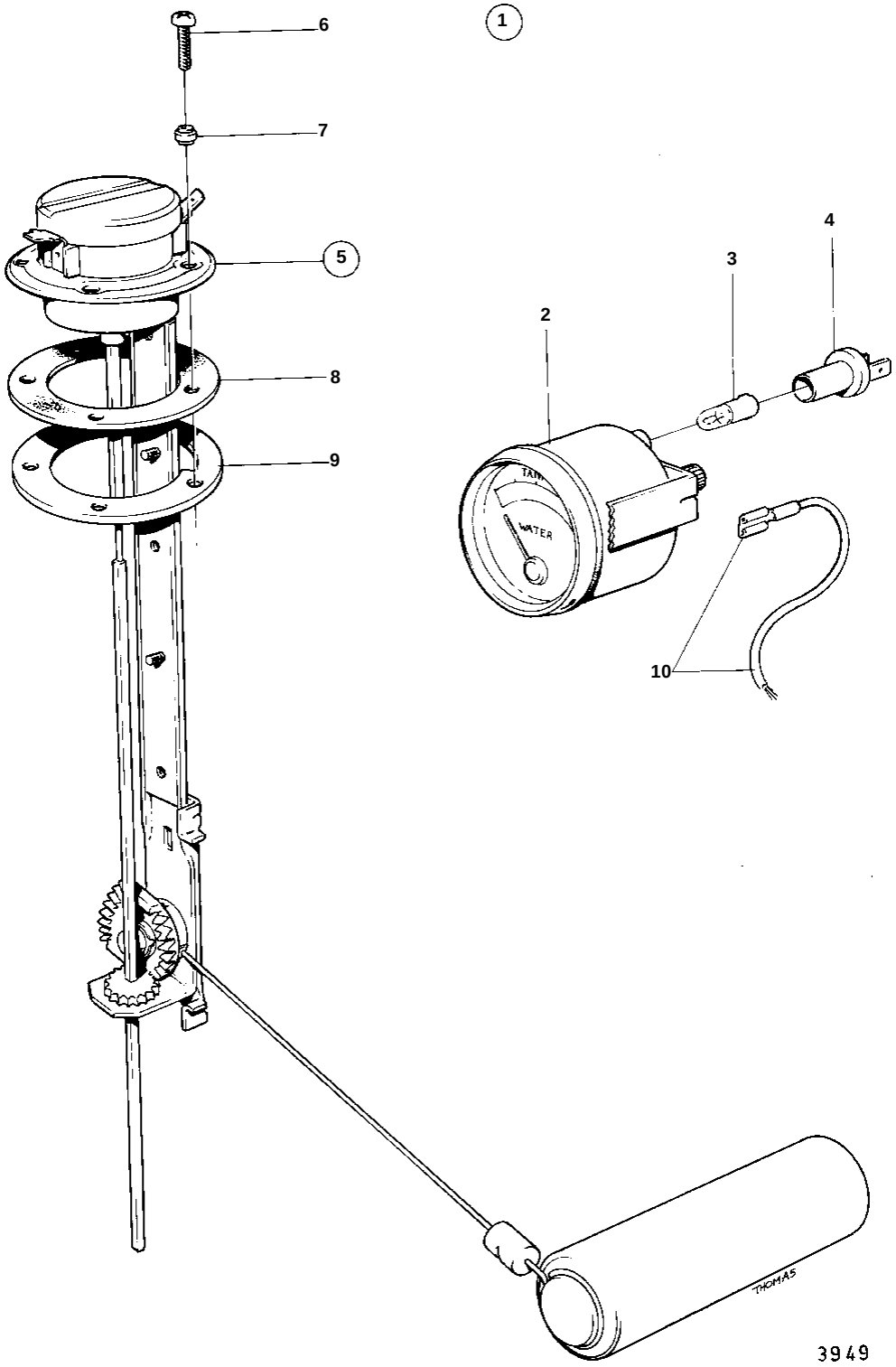

TANK METER KIT FOR FUEL AND DRINKING WATER, EARLIER PROD: 834400

COMMON

REF	PART NO.	QTY	DESCRIPTION		NOTES
1	834400	1	Tank gauge		FOR DRINKING WATER.
2	834380	1	· Tank gauge		
3	19923	1	· Bulb		
4	808175	1	· Bulb socket		
5	834389	1	· Sender		
6	956078	4	· · Screw		L = 16 MM
	956081	1	· · Screw		L = 25 MM
7	834481	5	· · Gasket		
8	89865	1	· · Gasket		
9	834480	1	· · Flange		
10		X	CABLES AND CABLE TERMINALS		SEE GROUP 3