DRIVE SP-A

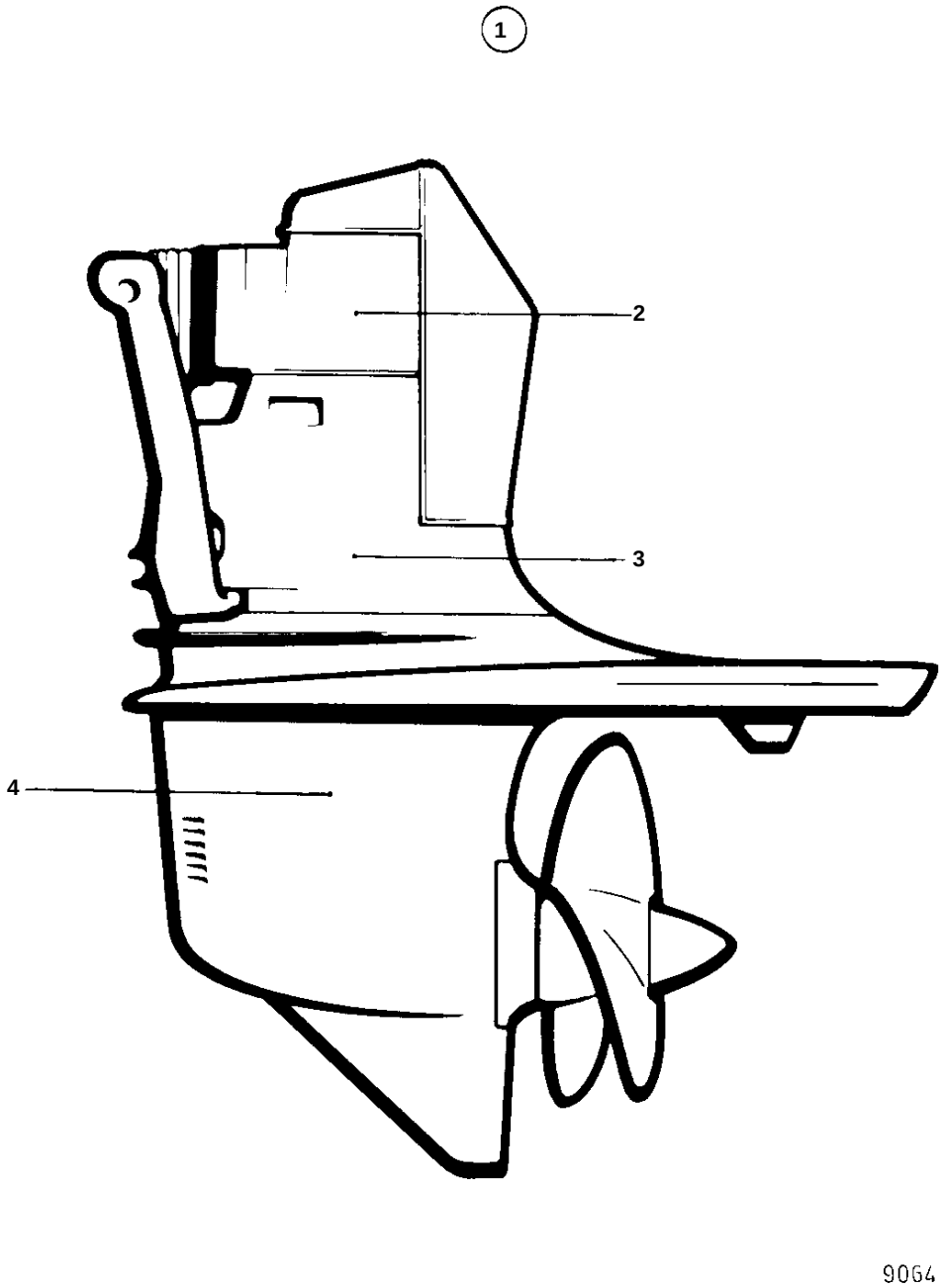

DRIVE SP-A

REF	PART NO.	QTY	DESCRIPTION		SEE SEC.	NOTES
1	854019	1	Drive			
2	854022	1	· Upper gear unit		04C-2500	
	3803114	1	· Upper gear, exchange			Exchange unit
3		1	· INTERM HOUSING		04C-2600	
4	854039	1	· Gear under		04C-2700	
	875192	1	Gasket kit			SEE GROUP 10A