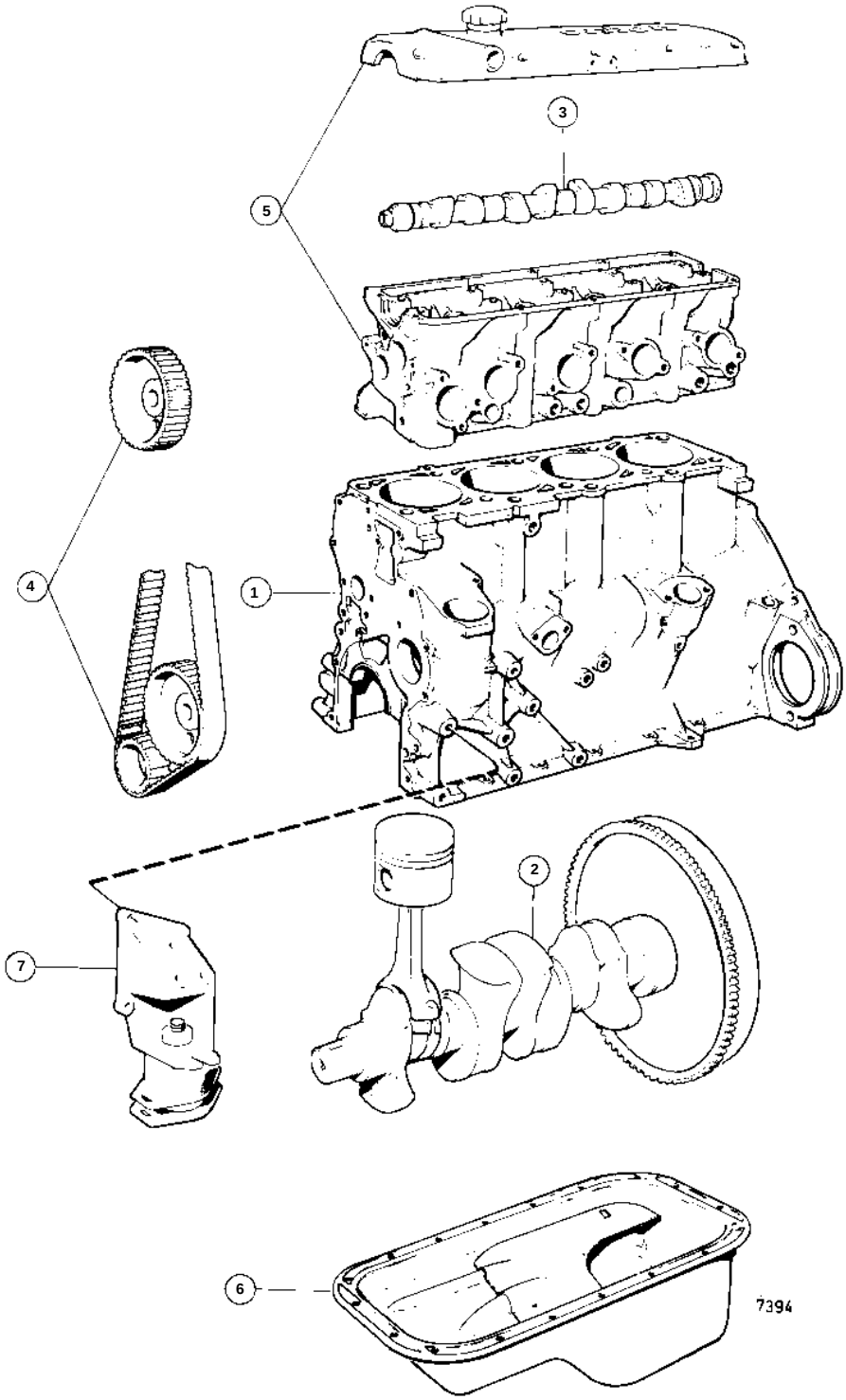
3
5
4
1
2
7
6
7394

REF	QTY	DESCRIPTION		SEE SEC.
1	1	CYLINDER BLOCK		02A-0300
2	1	CRANKSHAFT AND RELATED PARTS		02A-0550
3	1	CAMSHAFT AND VALVE MECHANISM		02A-0750
4	1	BELT TRANSMISSION		02A-0960
5	1	CYLINDER HEAD		02A-1225
6	1	LUBRICATING SYSTEM		02A-1500
7	1	ENGINE MOUNTS		02A-1810