AQ151A,AQ151B,AQ151C

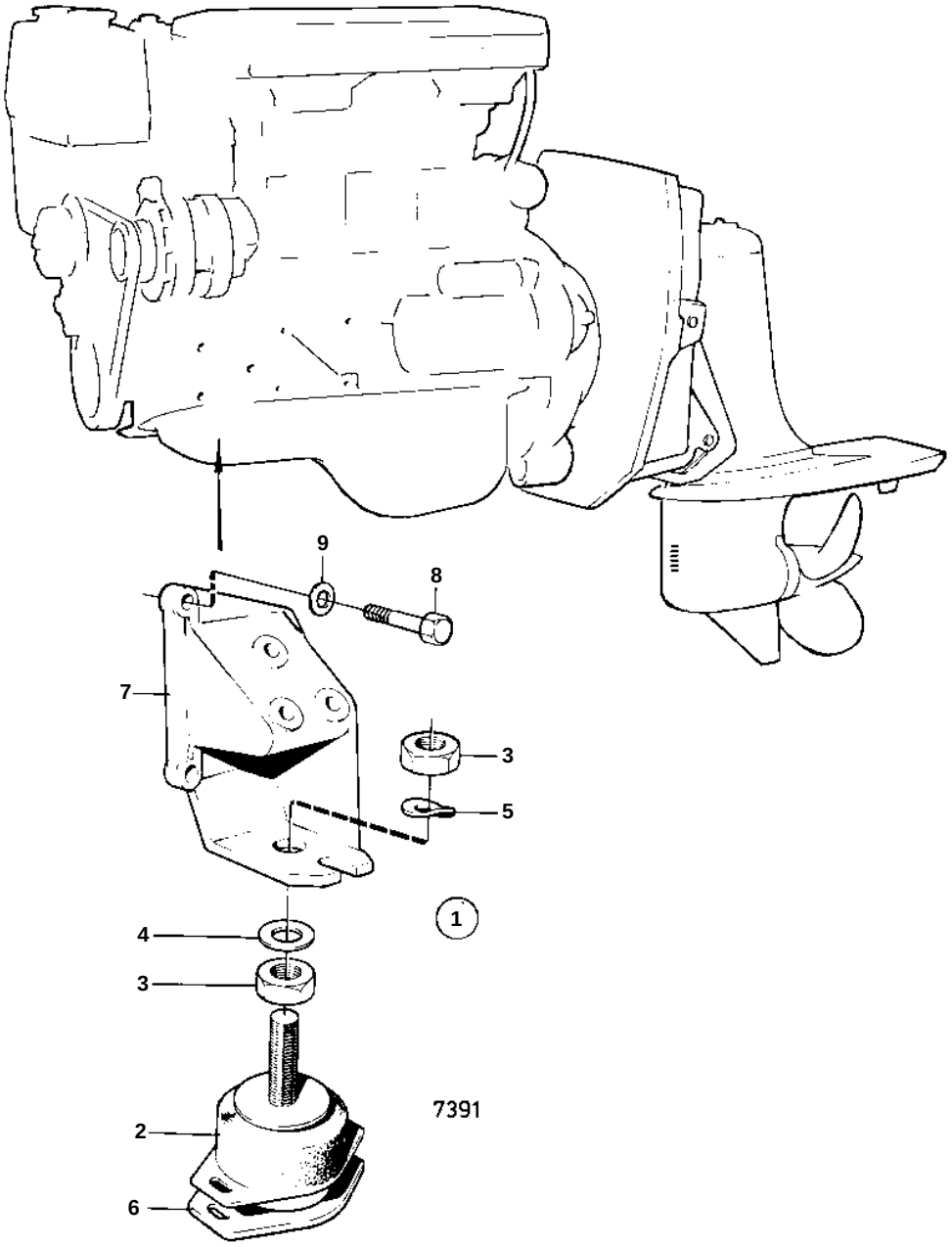

AQ151A,AQ151B,AQ151C

REF	PART NO.	QTY	DESCRIPTION		NOTES
1	834353	1	Rubber suspension		
2	833926	2	· Rubber element		
3	955805	4	· Nut		
4	955900	2	· Washer		
5	941912	2	· Spring washer		
6	834463	2	· Washer		
7	831973	1	Bracket		P
	831918	1	Bracket		S.B
8	955319	3	Screw		P
8	955305	3	Screw		S.B
9	960148	3	Washer		P
	955894	3	Washer		S.B