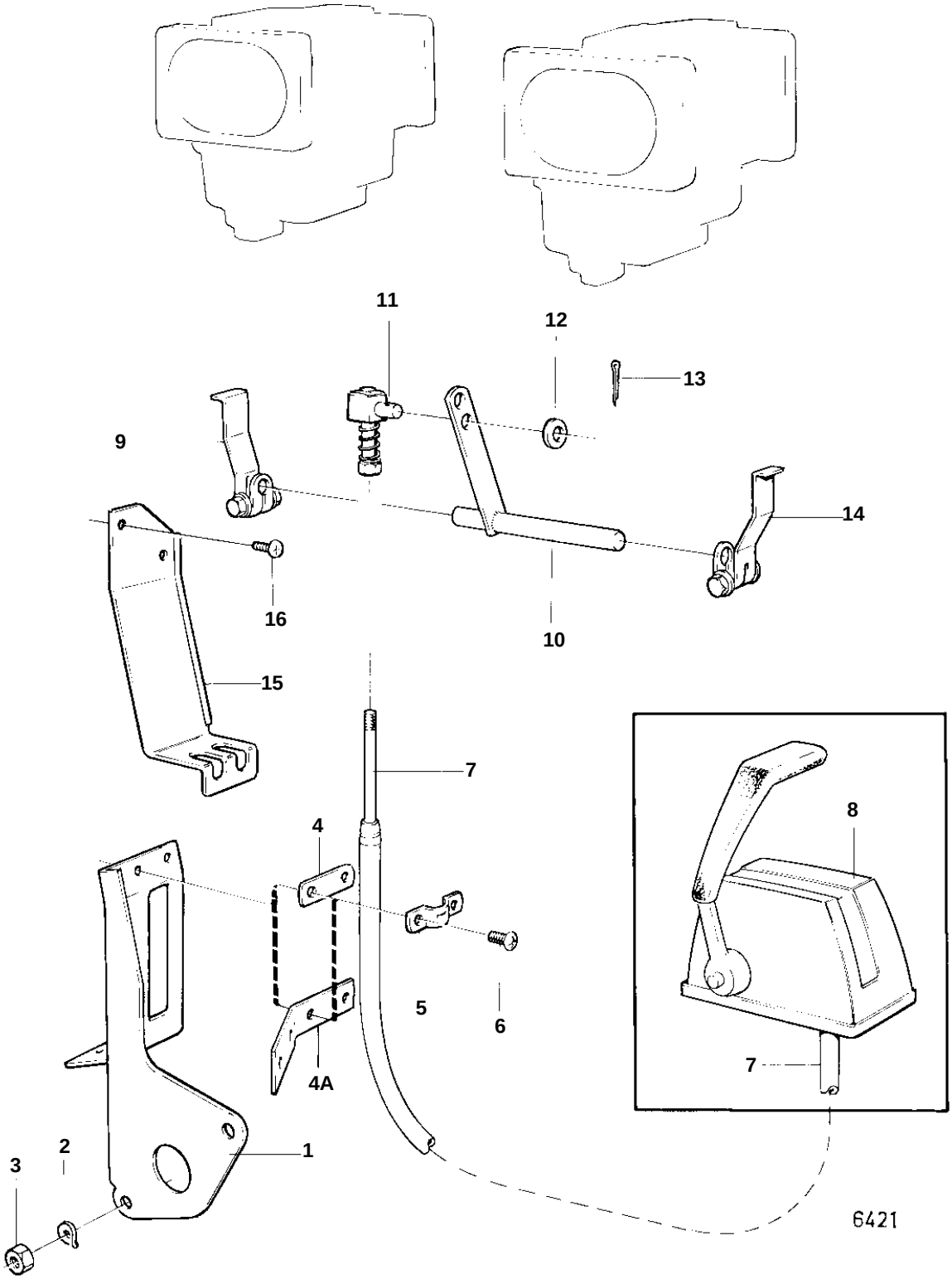
11
12
13
9
14
16
10
15
7
8
4
5
6
4A
7
2
3
1
6421

REF	PART NO.	QTY	DESCRIPTION		NOTES
7		X	CONTROL CABLE		SEE GROUP 9
8		X	CONTROL		SEE GROUP 9
11	841275	1	Cube		(804312)
12	940191	1	Washer		
13	907834	1	Cotter pin		(17276)
15	834967	1	Anchorage		
16	956094	2	Screw		