MUFFLER AND EXHAUST LINE EARLY TYPE: 854513

740A

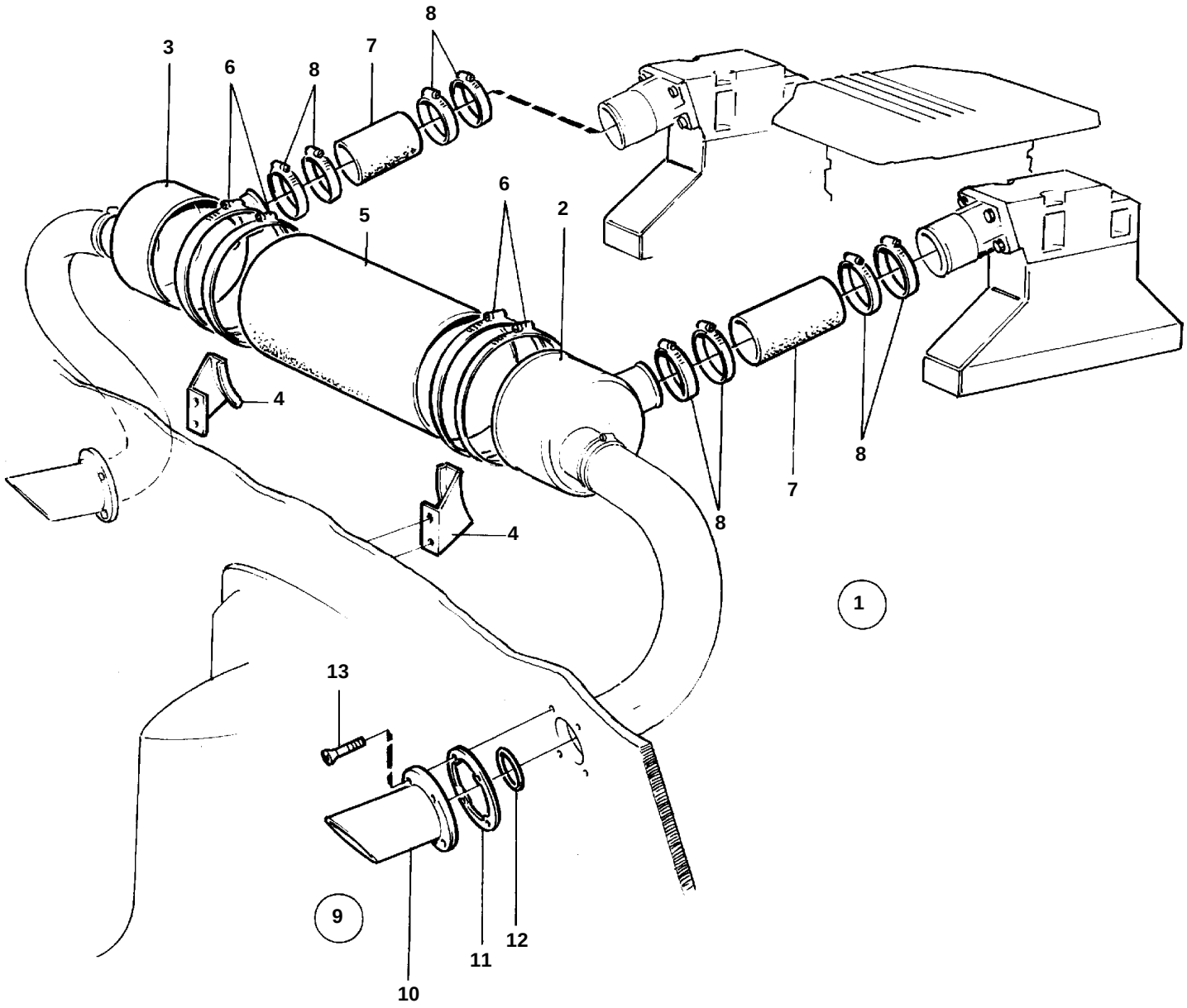

9909

740A

REF	PART NO.	QTY	DESCRIPTION	
9	854513	1	Exhaust pipe	
10	854363	2	· Exhaust pipe	
11	854490	2	· Gasket	
12	975284	2	· O-ring	
13	961348	8	· Screw	