740A

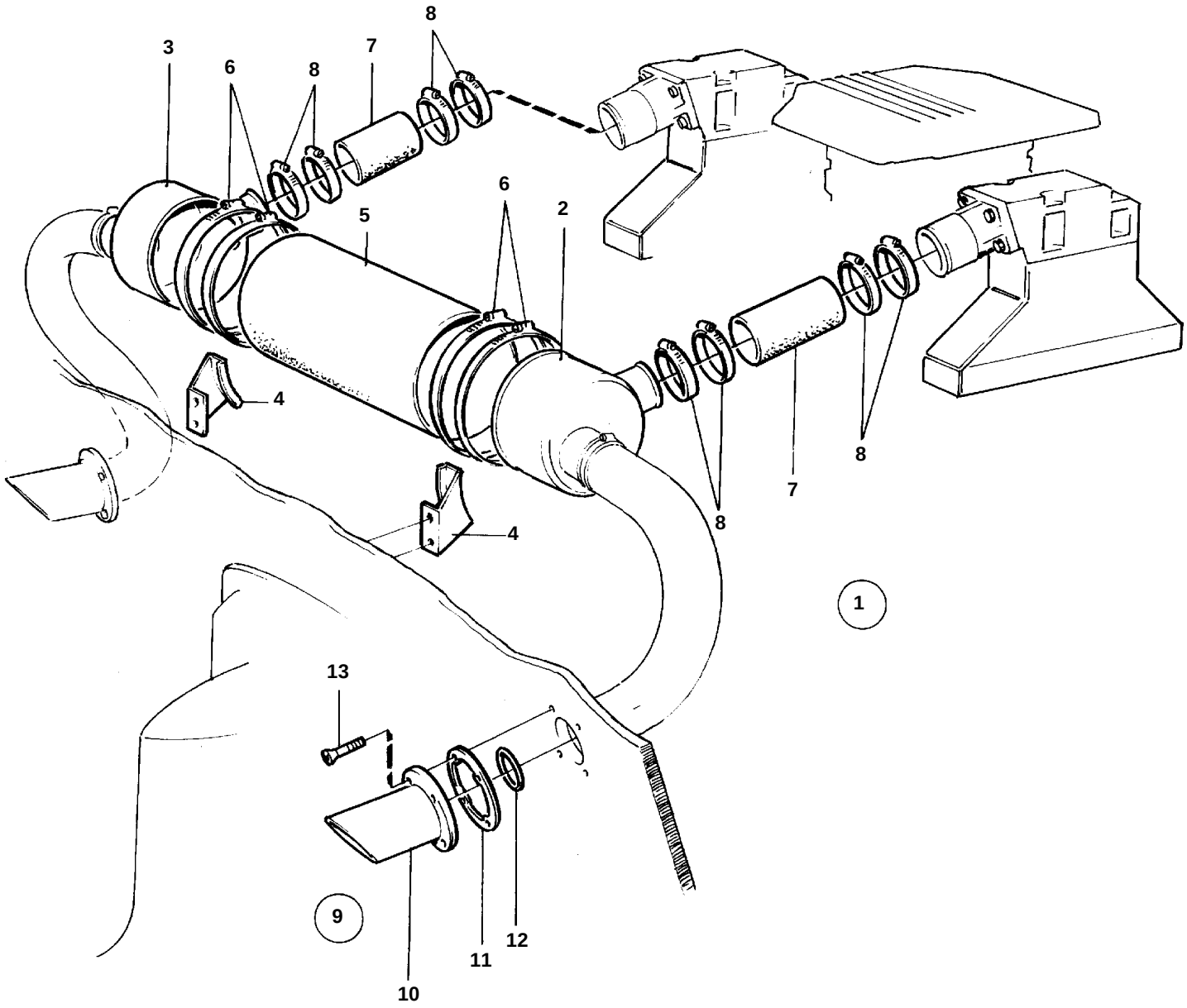

9909

740A

REF	PART NO.	QTY	DESCRIPTION		NOTES
1	854511	1	Muffler		REPL BY 872244
2		1	· GABLE		
3		1	· GABLE		
4	854517	2	· Retainer		
5	854484	1	· Exhaust hose		
6	949000	4	· Clamp		
7	854483	2	· Exhaust hose		
8	853012	8	· Hose clamp		