MUFFLER, BLIND FLANGE, EXHAUST LINE, LATE TYPE: 872244

740A

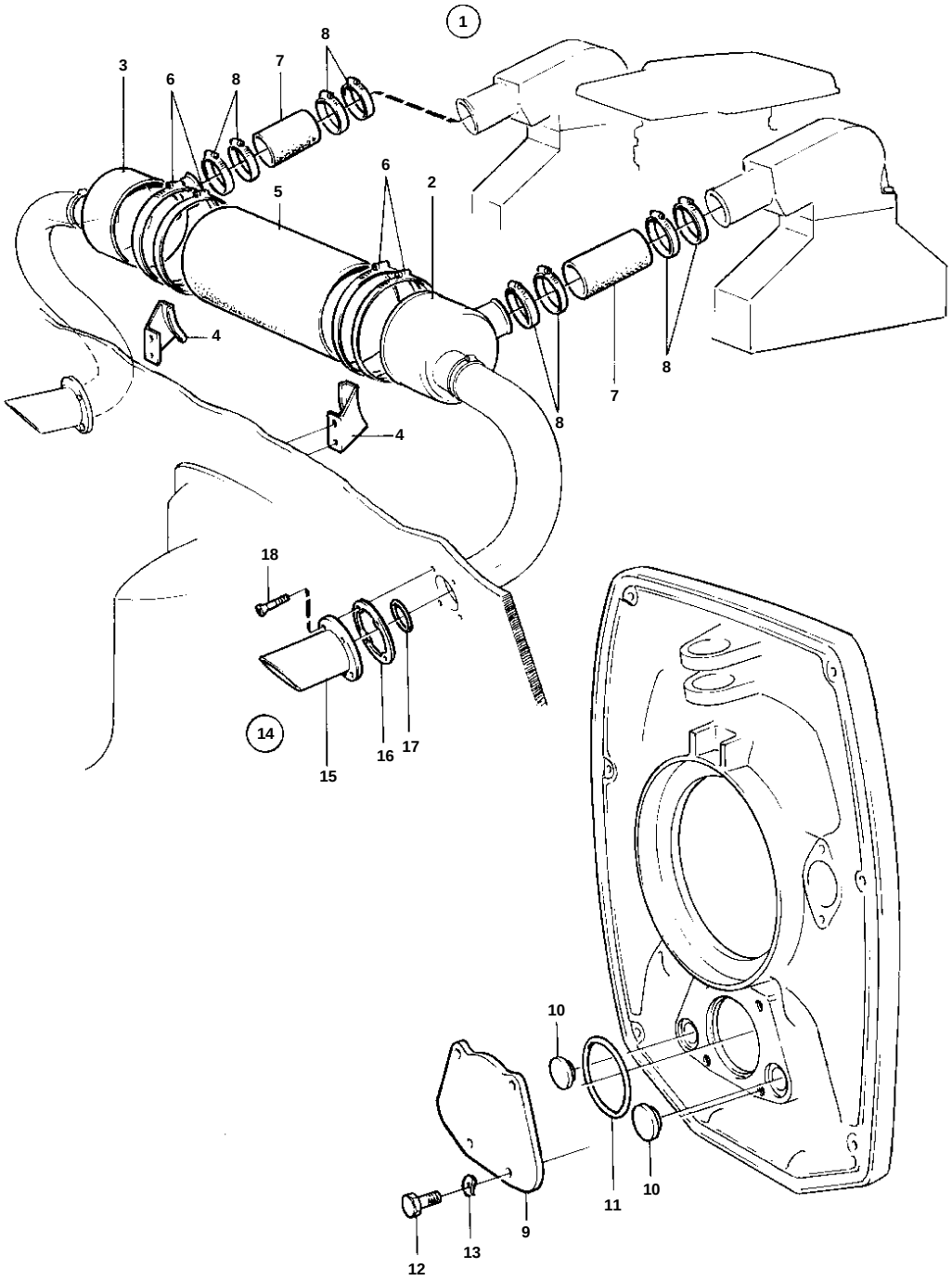

MUFFLER, BLIND FLANGE, EXHAUST LINE, LATE TYPE: 872244

740A

REF	PART NO.	QTY	DESCRIPTION	
1	872244	1	Muffler	
2		1	· GABLE	
3		1	· GABLE	
4	854517	2	· Retainer	
5	854484	1	· Exhaust hose	
6	949000	4	· Clamp	
7	854483	2	· Exhaust hose	
8	853012	8	· Hose clamp	
9	854651	1	· Seal flange	
10	814473	2	· Rubber plug	
11	925256	1	· O-ring	
12	970945	4	· Screw	
13	941908	4	· Spring washer	