EXHAUST OUTLET AND EXHAUST LINE: 854516

740A

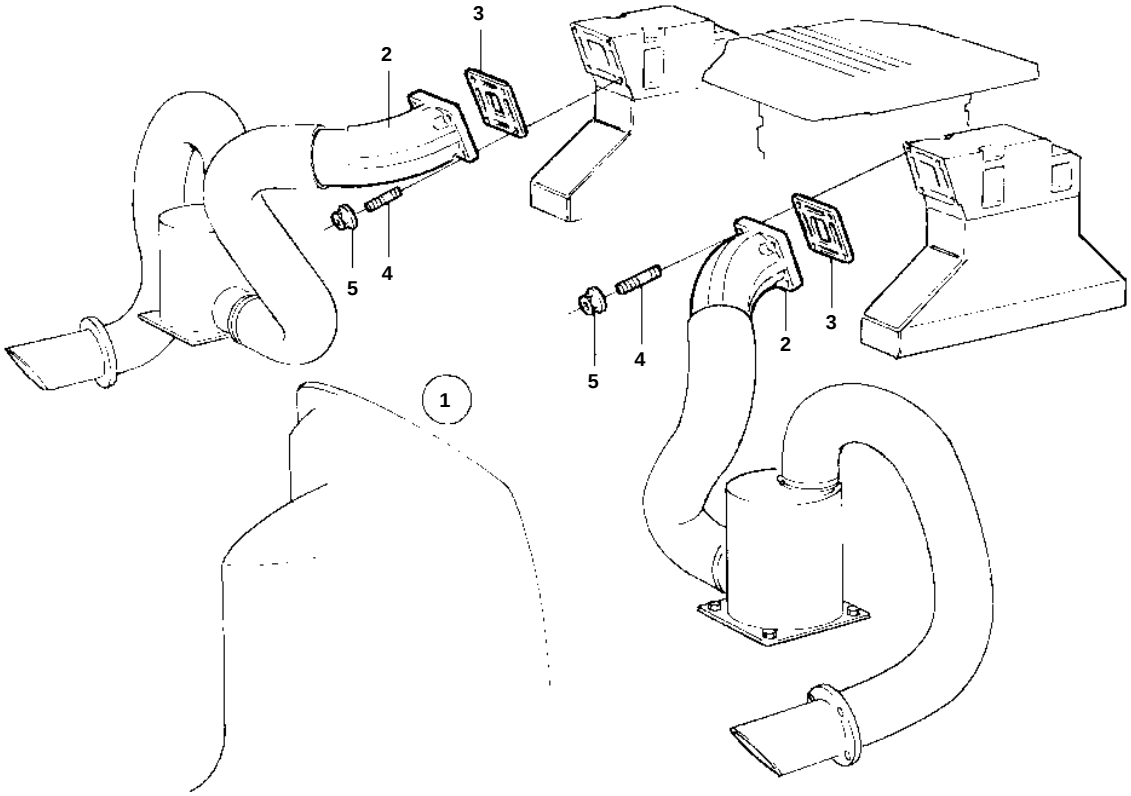

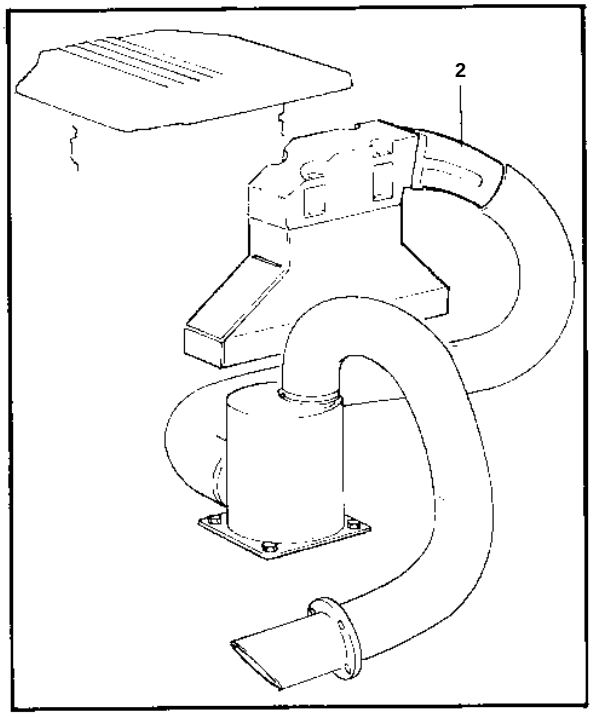

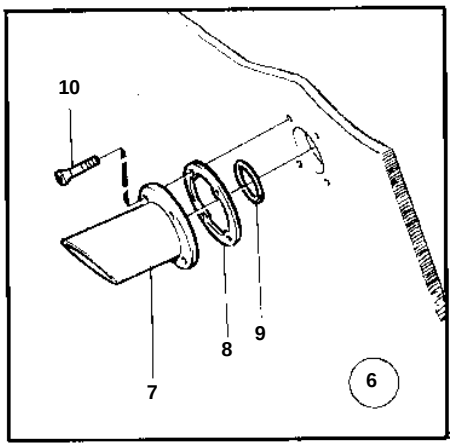

740A

REF	PART NO.	QTY	DESCRIPTION		NOTES
1	854516	1	Exhaust outlet		
2	856912	2	· Exhaust outlet		(856436)
3	856429	2	· Gasket		
4	924077	8	· Stud		
5	971095	8	· Nut		