740A

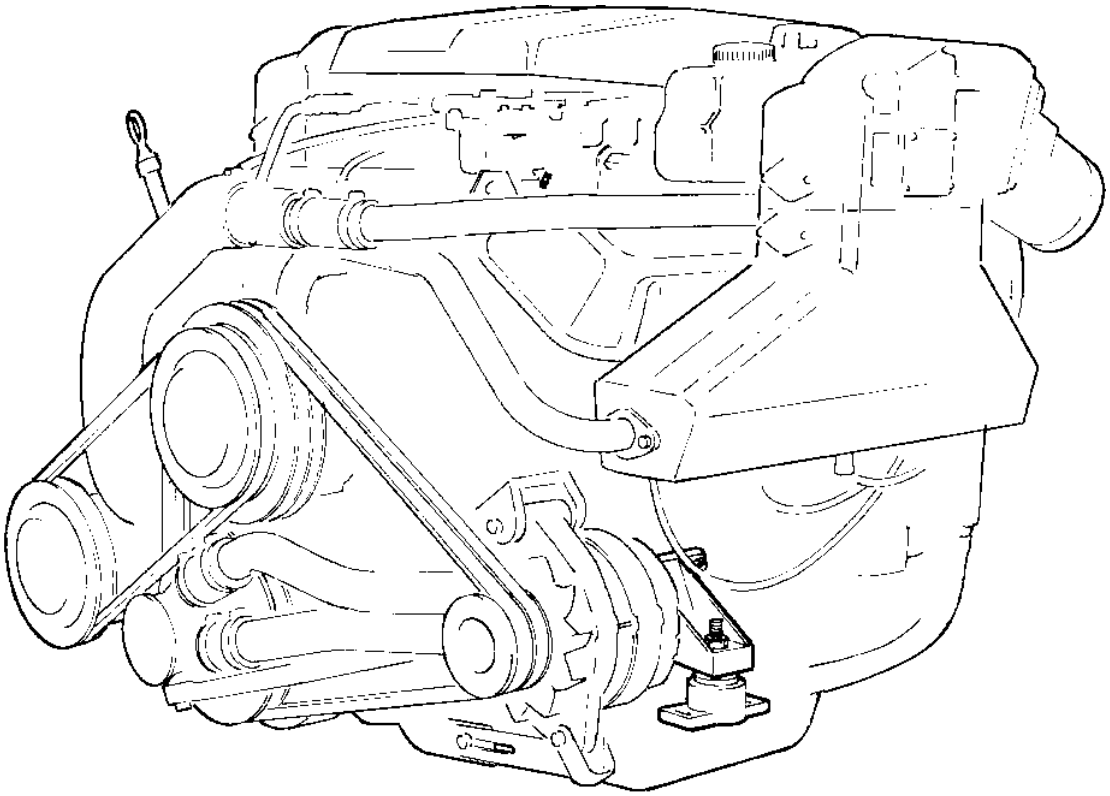

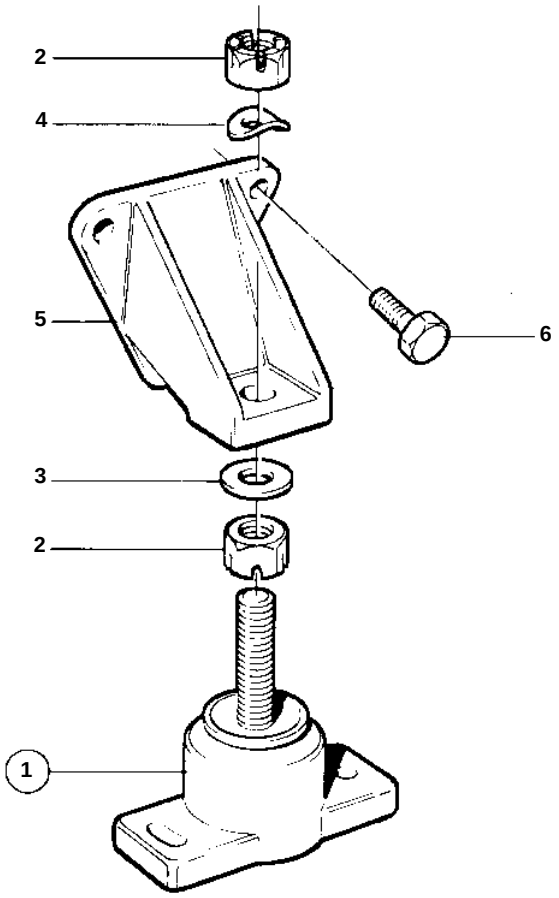

740A

REF	PART NO.	QTY	DESCRIPTION	
1	835449	2	Rubber cushion	
2	944236	4	· Lock nut	
3	955900	2	Washer	
4	941912	2	Spring washer	
5	835459	2	Bracket	
6	955535	6	Screw	