740A/MS5

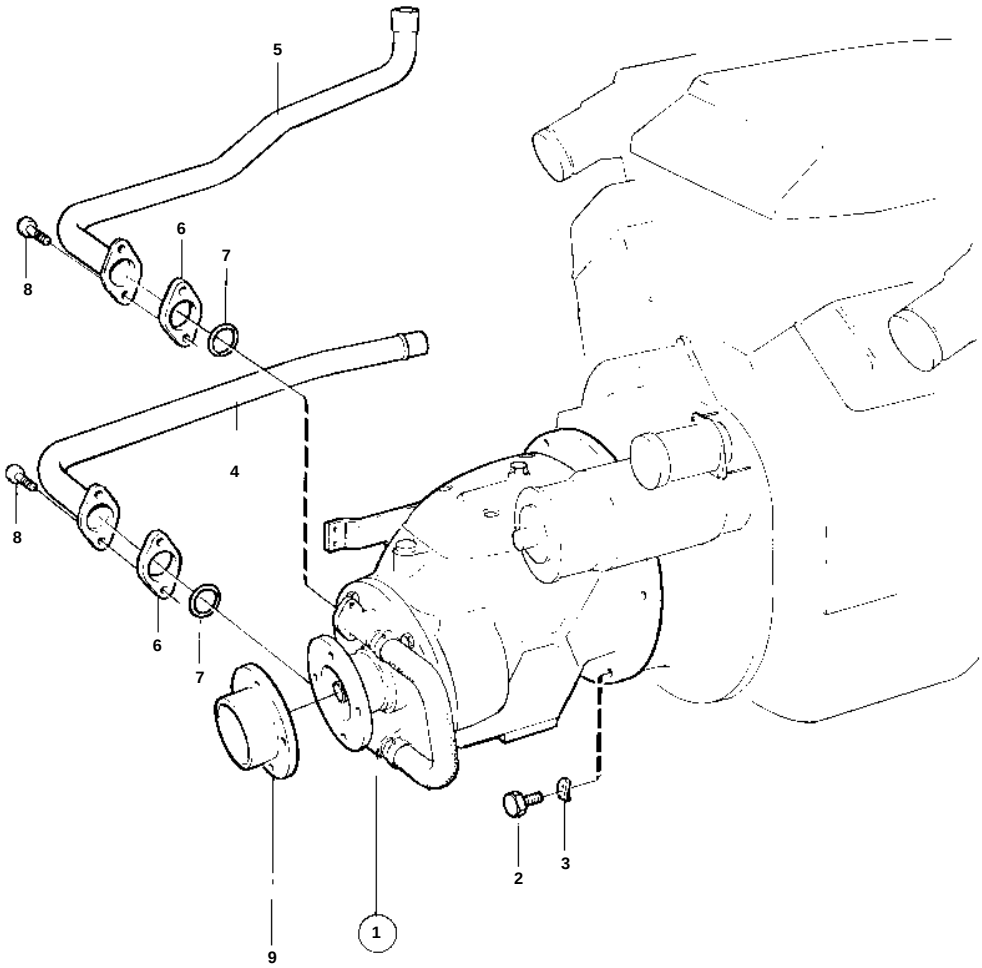

9601

740A/MS5

REF	PART NO.	QTY	DESCRIPTION		NOTES
1	853953	1	Reversing gear		RATIO 1,55:1
			COMPONENTS		SEE GROUP 4B
	853954	1	Reversing gear		RATIO 1,94:1
			COMPONENTS		SEE GROUP 4B
	853955	1	Reversing gear		RATIO 2,40:1
			COMPONENTS		SEE GROUP 4B
2	940160	6	Screw		
3	941909	6	Spring washer		
4	856223	1	Tube		
5	856224	1	Tube		
6	854184	2	Flange		
7	925062	2	O-ring		
8	942001	4	Screw		
9	946544	X	Flange screw		SEE GROUP 9