HOT WATER OUTLET: 855876

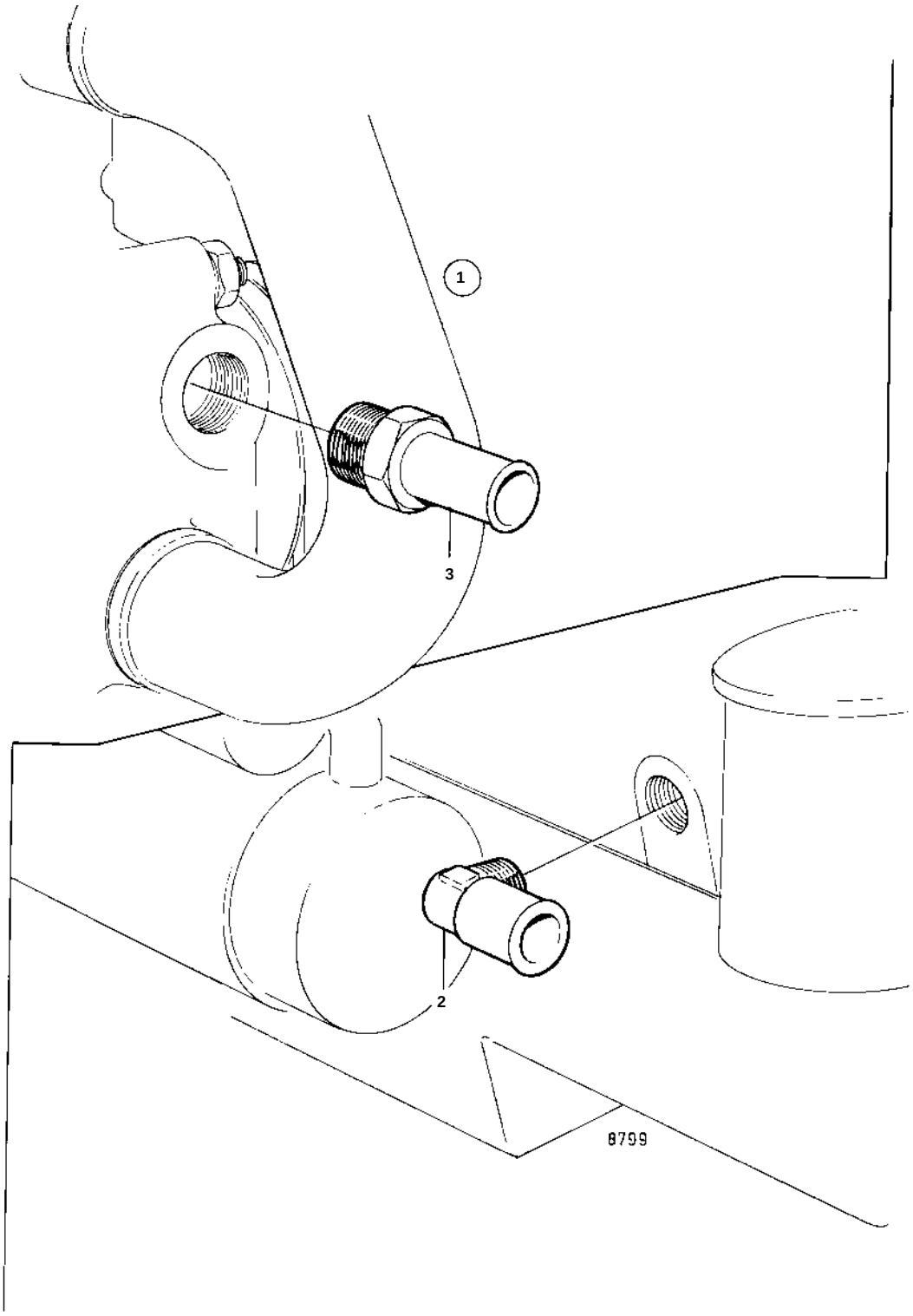

REF	PART NO.	QTY	DESCRIPTION	NOTES
1	855876	1	Hot water outlet	
2	856483	1	· Hose connection	(945341)
3	961657	1	· Hose nipple	