500A,501A

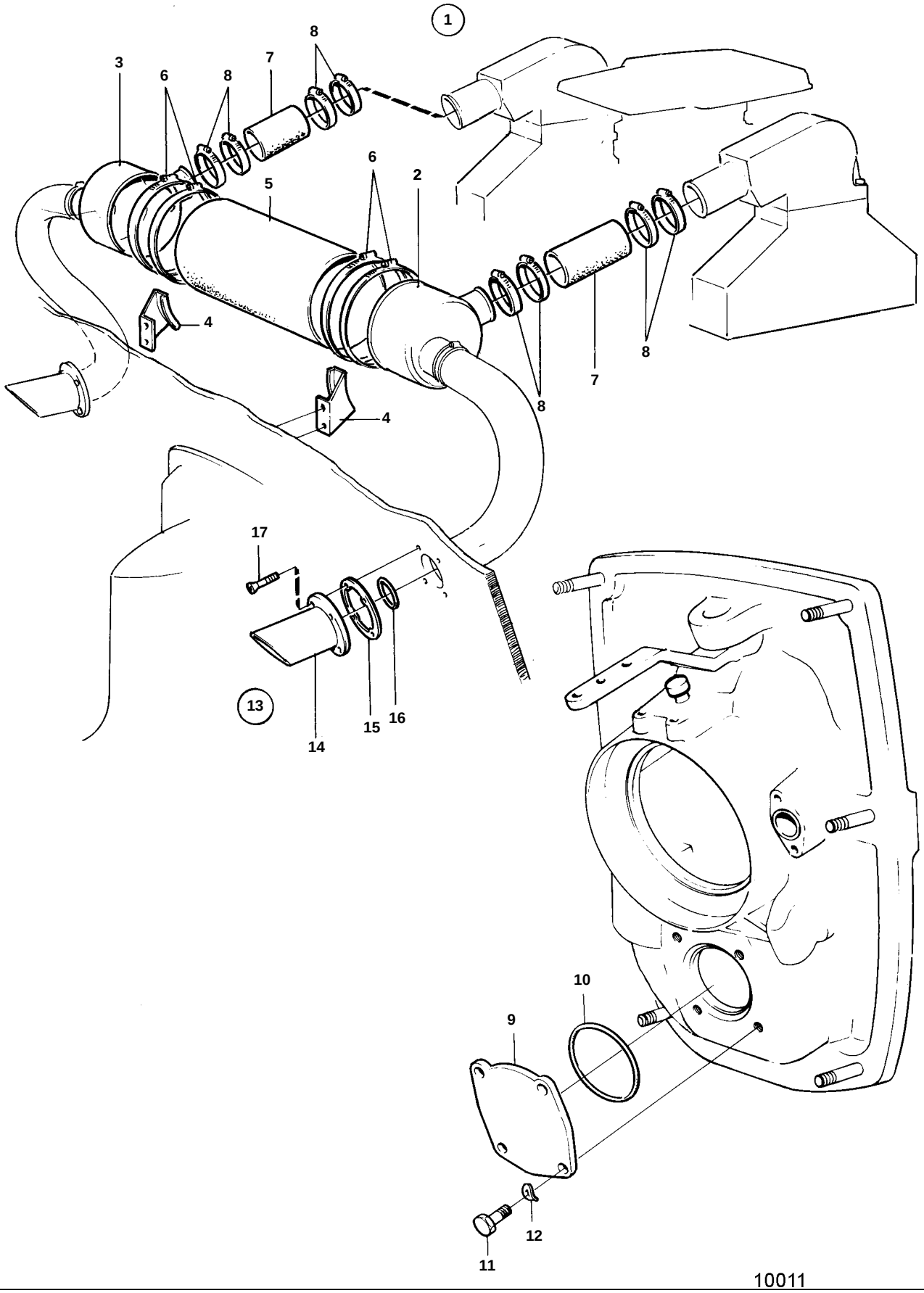

500A,501A

REF	PART NO.	QTY	DESCRIPTION	
1	854565	1	Muffler	
2		1	· GABLE	
3		1	· GABLE	
4	854517	2	· Retainer	
5	854552	1	· Exhaust hose	
6	949000	4	· Clamp	
7	854554	2	· Exhaust hose	
8	853012	8	· Hose clamp	
9	854584	1	· Flange	
10	925260	1	· O-ring	
11	970945	4	· Screw	
12	941908	4	· Spring washer	