5.7GXi-N

1

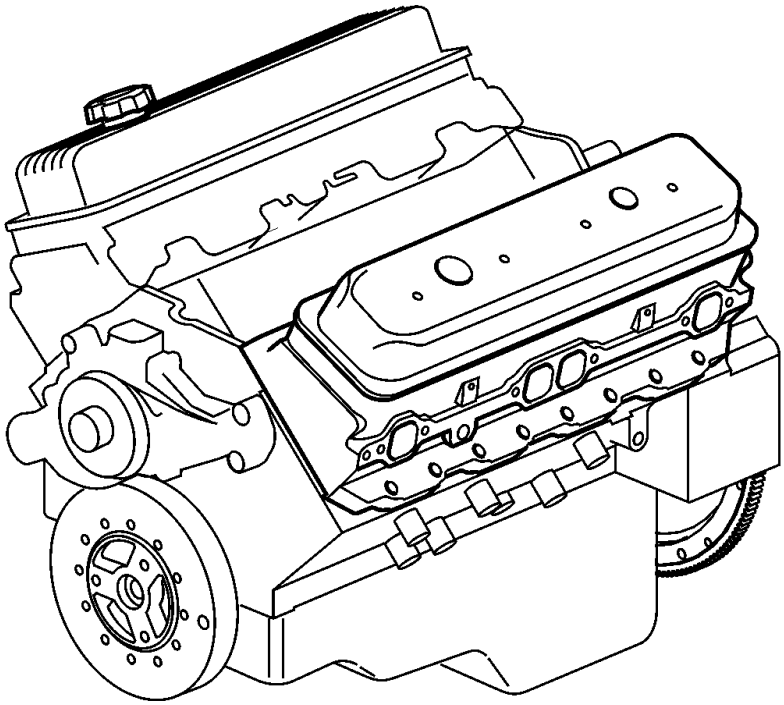

24325

5.7GXi-N

REF	PART NO.	QTY	DESCRIPTION	SEE SEC.	NOTES
1	3801411	1	Engine, exch		use to repair non-compliant engines
			· Bulletin P-21-0-25	P-21-0-25-EN	US EPA Regulations for Longblock Sales and Use