5.0GXiE-JF, 5.0GXiE-J, 5.0OSiE-JF, 5.0OSiE-J, 5.0GXiE-K, 5.0GXiE-KF, 5.0GXiE-M, 5.0GXiE-MF, 5.0GXiE-N

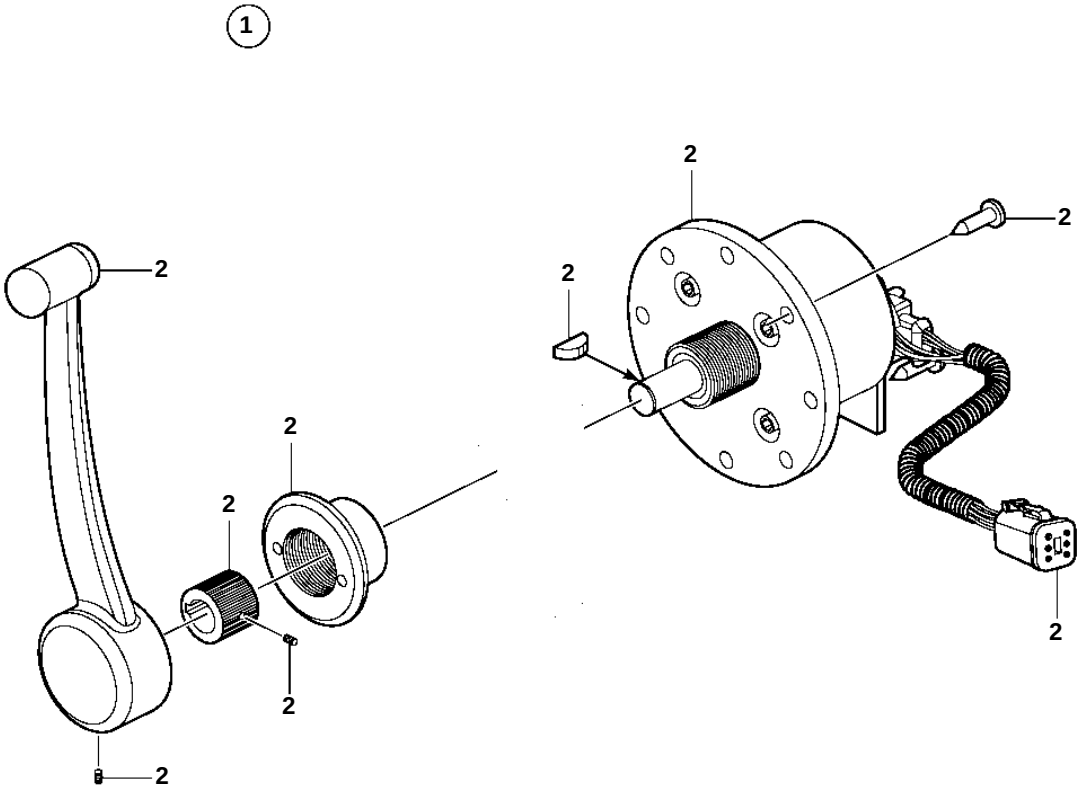

24015

5.0GXiE-JF, 5.0GXiE-J, 5.0OSiE-JF, 5.0OSiE-J, 5.0GXiE-K, 5.0GXiE-KF, 5.0GXiE-M, 5.0GXiE-MF, 5.0GXiE-N

REF	PART NO.	QTY	DESCRIPTION
1	3888616	1	Control
2			Parts not sold separately