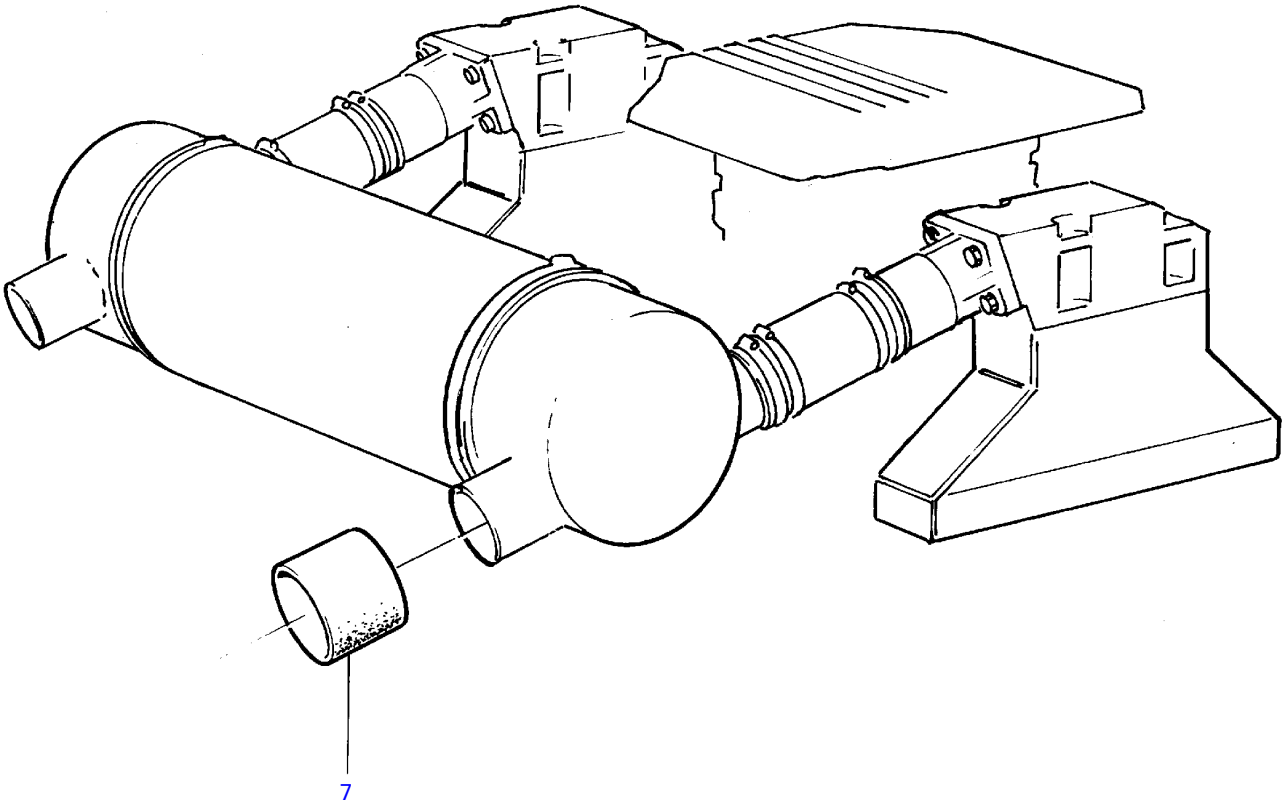
7

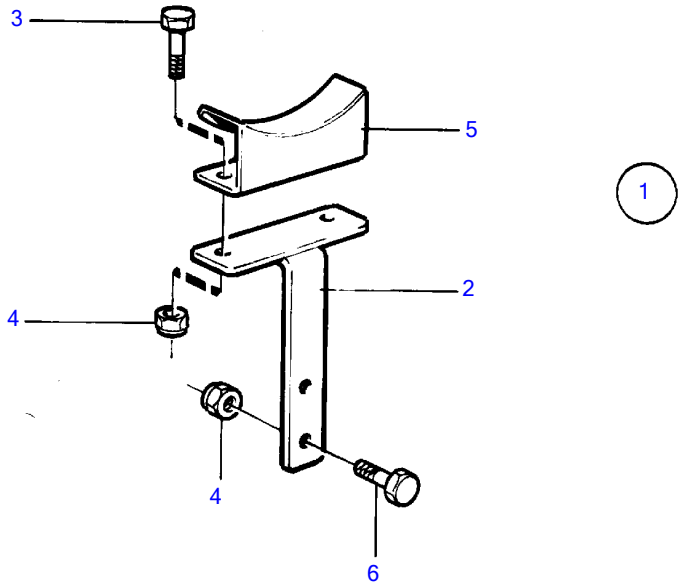
3
5
1
2
4
4
6

REF	PART NO.	QTY	DESCRIPTION	NOTES
1	(854515)	1	Mounting kit	Obsolete part
2	(854519)	2	▪ Bracket	Obsolete part
3	940142	4	▪ Hexagon screw	
4	963106	8	▪ Lock nut	
5	842767	2	▪ Bracket	
6	955295	4	▪ Hexagon screw	
7	854551	2	▪ Exhaust hose	