Exhaust Outlet and Exhaust Line: 854513

740B

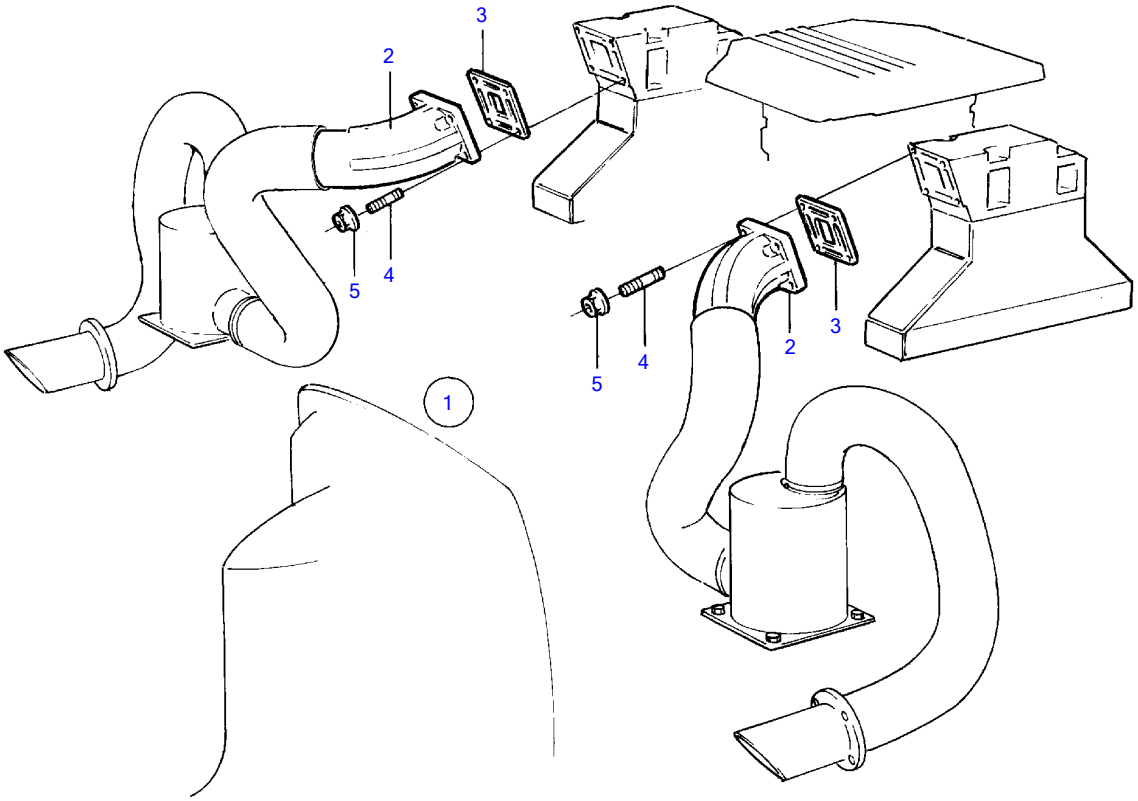

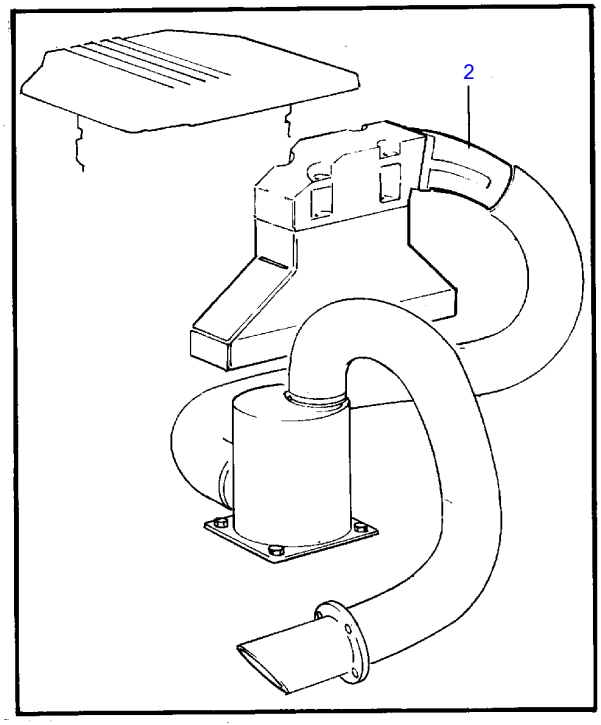

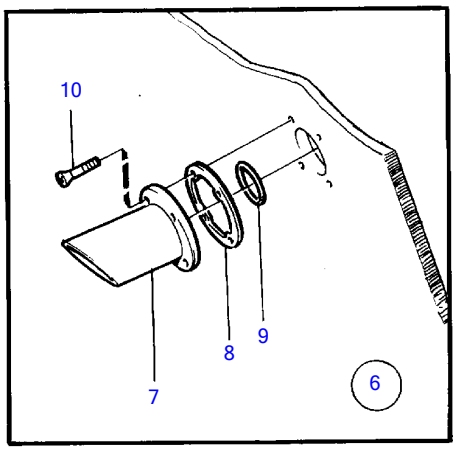

740B

REF	PART NO.	QTY	DESCRIPTION	NOTES
6	(854513)	1	Exhaust pipe	Obsolete part
7	(854363)	2	▪ Exhaust pipe	Obsolete part
8	854490	2	▪ Gasket	
9	975284	2	▪ O-ring	
10	961348	8	▪ Cross recessed screw	