Coupling Flange: 827957

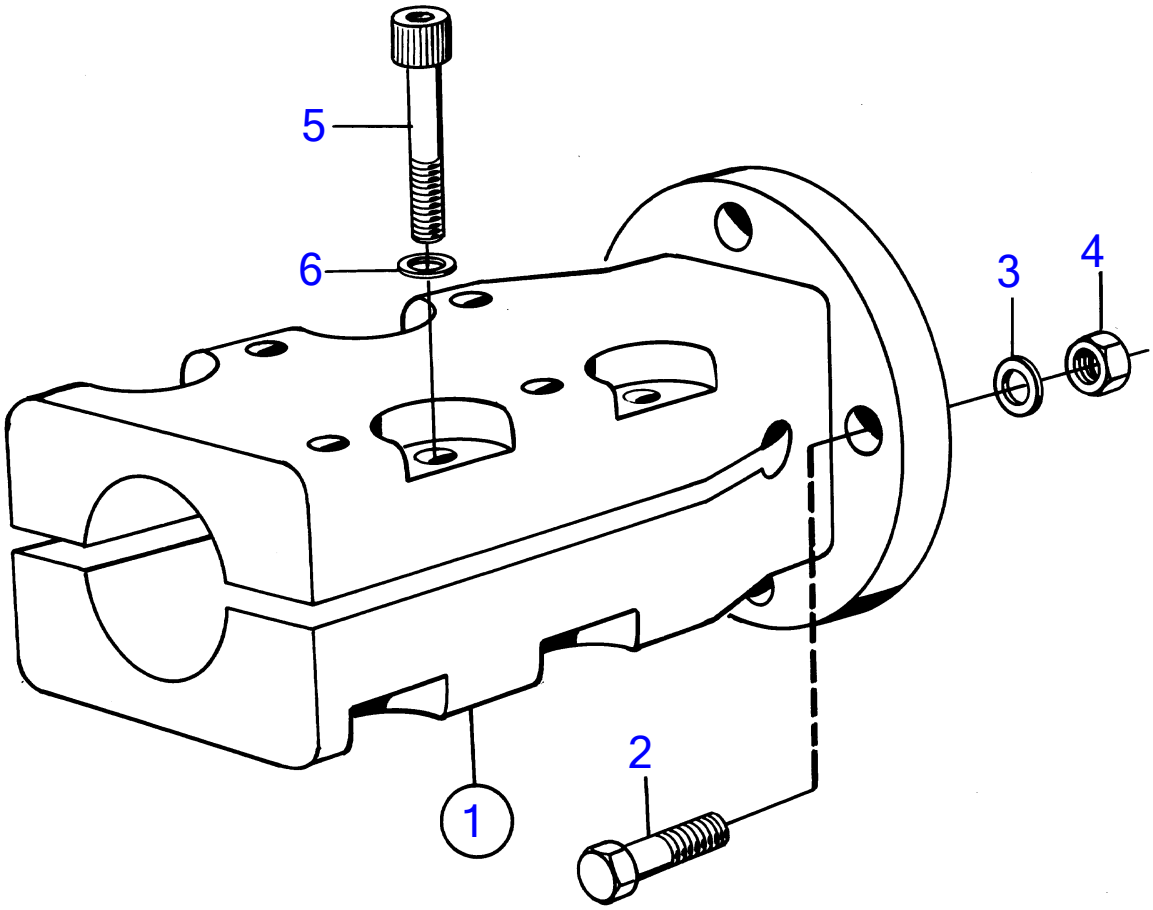

4623

REF	PART NO.	QTY	DESCRIPTION	NOTES
1	827957	1	Clamp coupling	35mm hole for propeller shaft., Repl by 872943
2	955693	4	▪ Hexagon screw	
	955691	4	▪ Hexagon screw	
3	941909	4	▪ Spring washer	
4	950375	4	▪ Lock nut	
5	948670	8	▪ Hex. socket screw	
6	947345	8	▪ Washer	