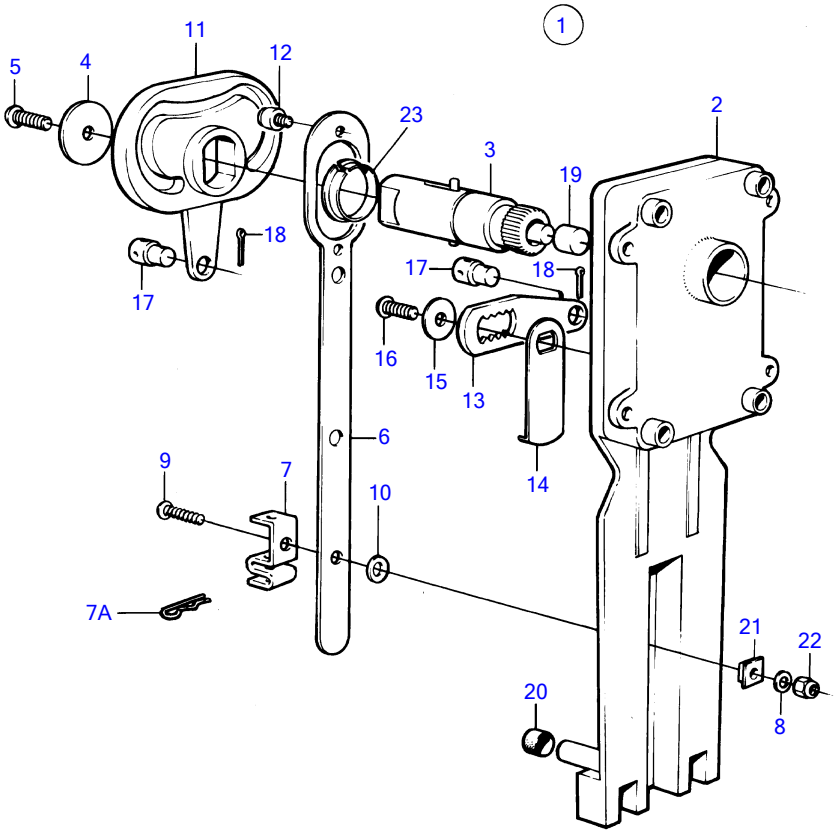

7600

REF	PART NO.	QTY	DESCRIPTION	NOTES
1	851601	1	Control	Side-mounted replaced by 1140095.
7	853423	1	▪ Retainer	
7A	852924	1	▪ Clip	
17	839638	2	▪ Cube	
18	17253	2	▪ Split pin	