Blind Flange Kit Exhaust Outlet: 1140003

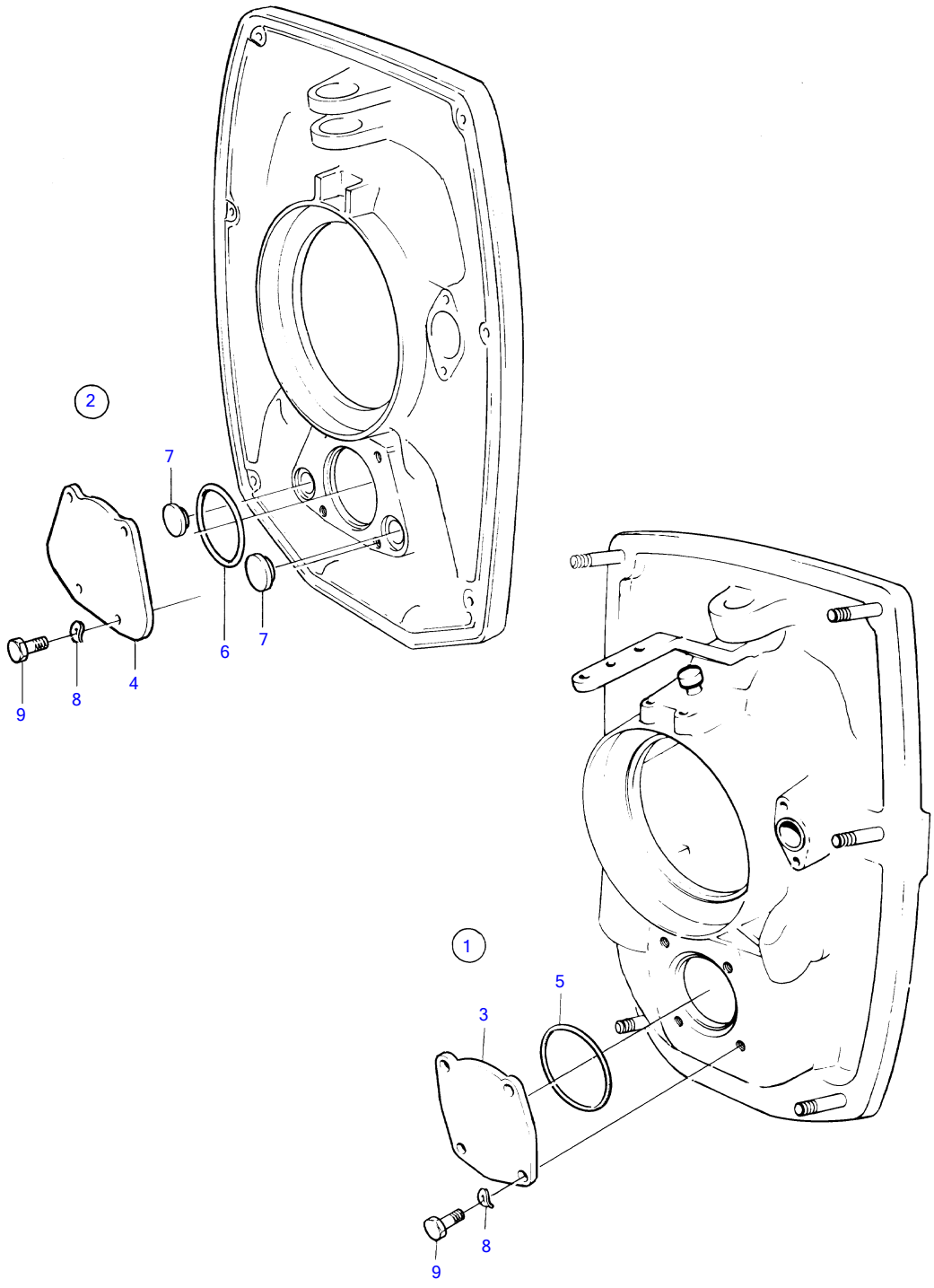

REF	PART NO.	QTY	DESCRIPTION	NOTES
1	(1140003)	1	Cover plate	Early type, Obsolete part
3	(854584)	1	Seal flange	Repl by 1140003, Obsolete part
5	925260	1	O-ring	
8	941908	4	Spring washer	
9	970945	4	Hexagon screw	