4.3GL-J

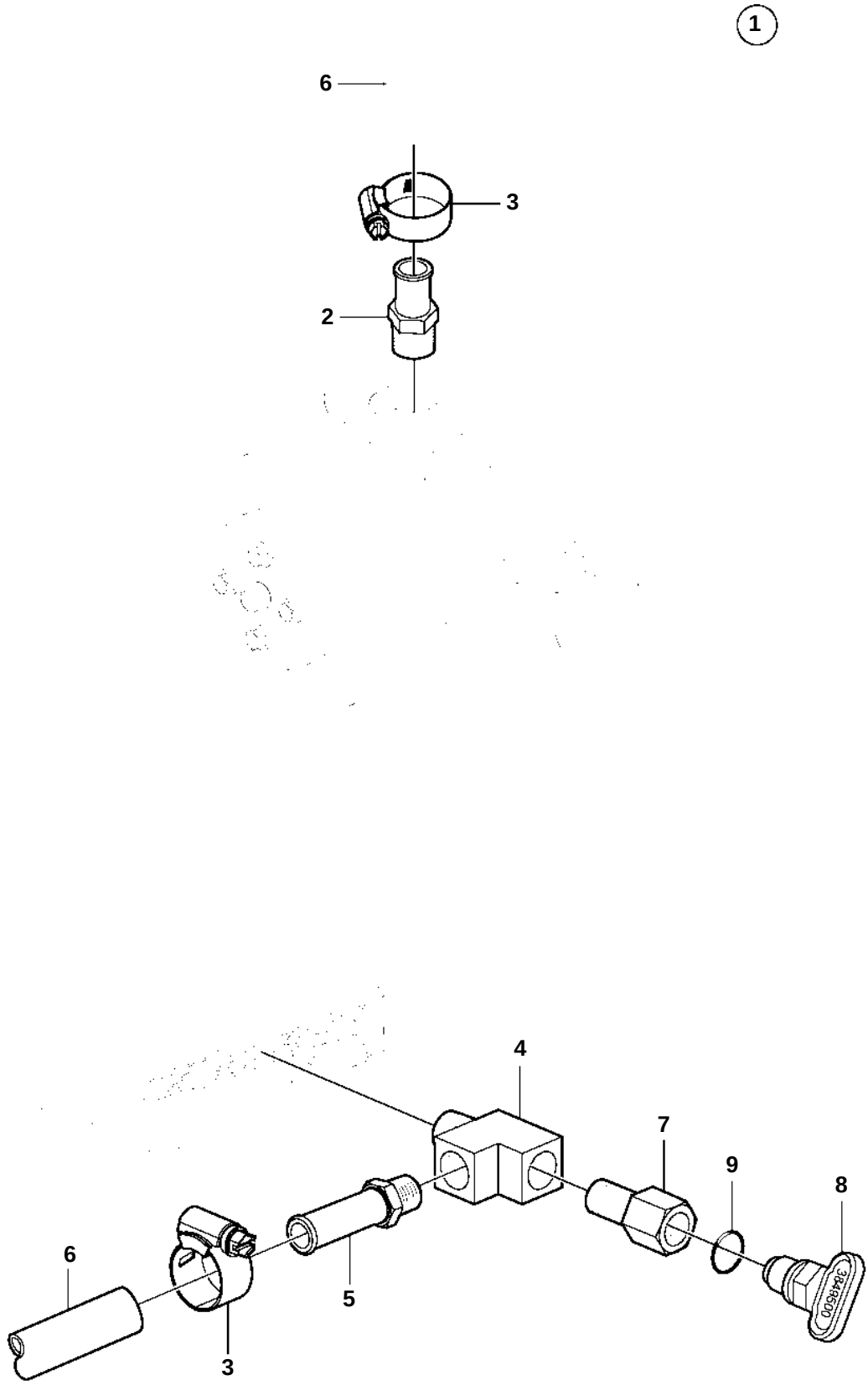

4.3GL-J

REF	PART NO.	QTY	DESCRIPTION	NOTES
1	40005449	1	Kit	
2	3818035	1	· Fitting	
3	3863439	2	· Hose clamp	
4	3841708	1	· Fitting	
5	856483	1	· Hose connection	
6		1	Hose, heater	Hose not supplied with kit.
7	3849942	1	Fitting	
8	3849500	1	Plug	
9		1	· O-ring	not sold separately