4.3GL-JF

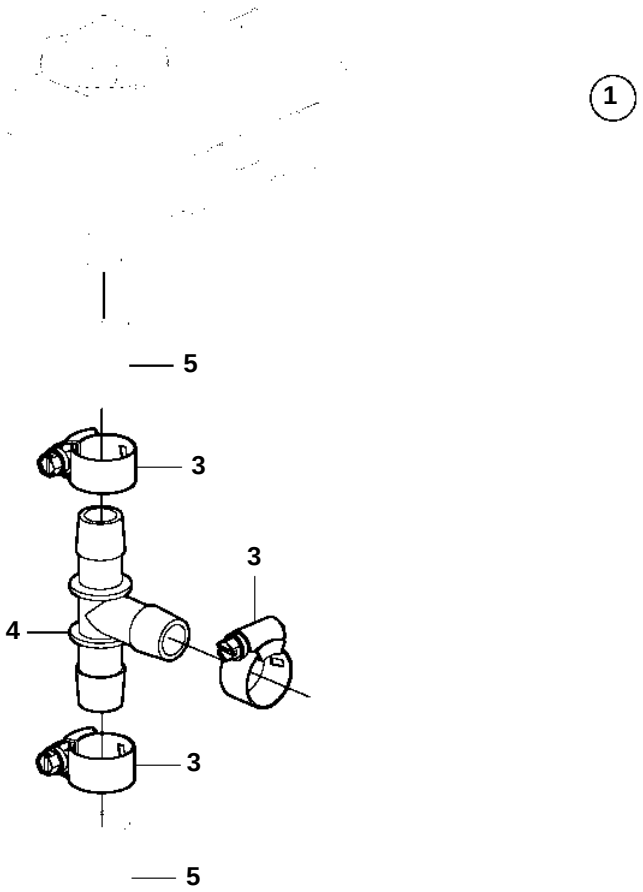

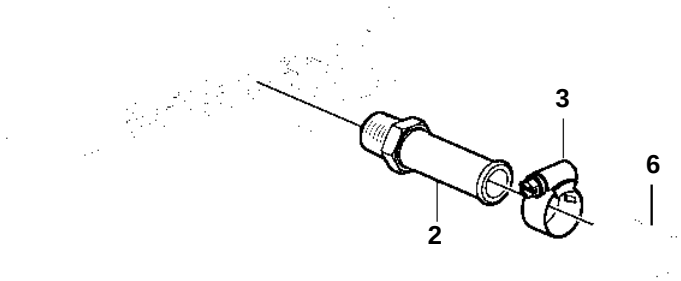

23911

4.3GL-JF

REF	PART NO.	QTY	DESCRIPTION	NOTES
1	40005450	1	Kit	Kit has other parts that are not used on this engine
2	856483	1	· Hose connection	
3	3863439	4	· Hose clamp	
4	3860613	1	· T-nipple	
5		X	Hose, expansion tank	Cut
6		X	Hose, heater	Hose not supplied with kit.