4.3GL-E

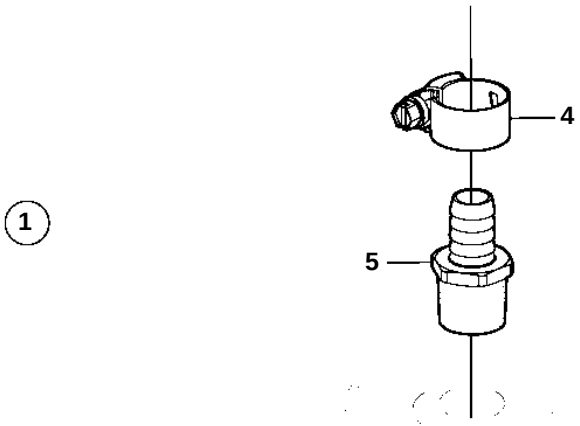

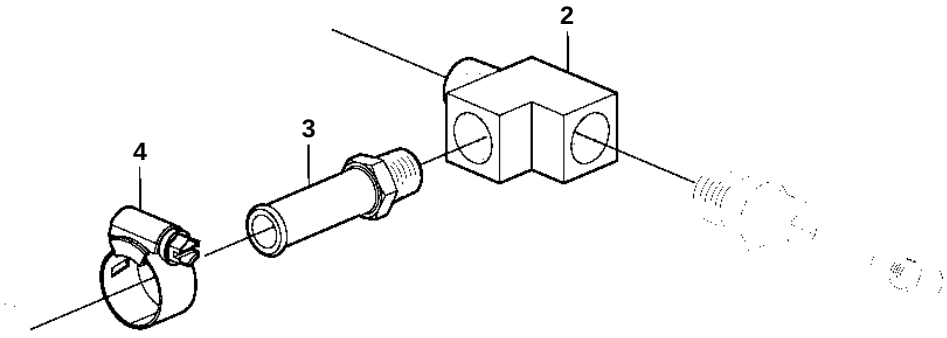

21979

4.3GL-E

REF	PART NO.	QTY	DESCRIPTION	
1	3818034	1	Hot water outlet	
2	3841708	1	· Fitting	
3	856483	1	· Hose nipple	
4	3863439	2	· Clamp	
5	3818035	1	· Fitting	