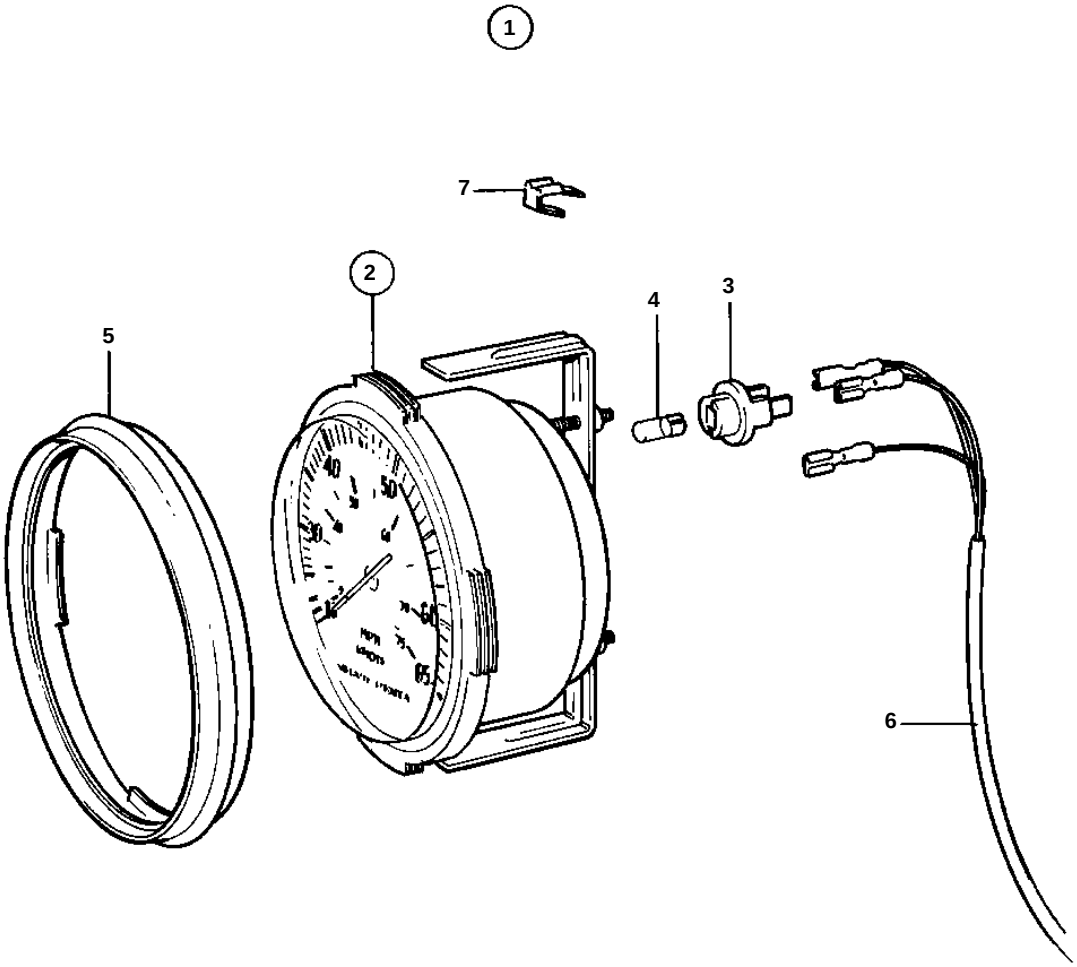
1
7
2
4
3
5
6

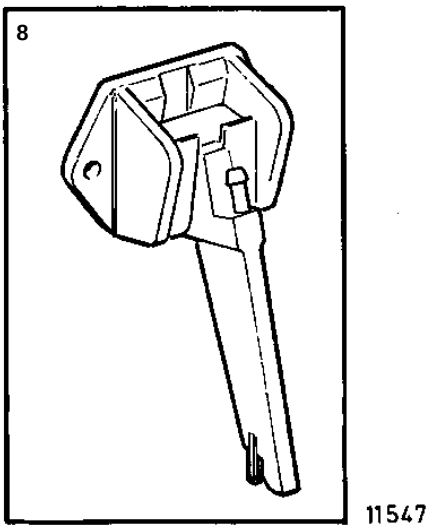
8
11547

REF	PART NO.	QTY	DESCRIPTION		NOTES
1	1140433	1	Pressure log kit		
2	856810	1	· Pressure log		
3	863945	1	· · Bulb socket		
4	863946	1	· · Bulb		
5	856805	1	· Front ring		
6		1	· CABLE KIT		
		X	· · CABLES AND TERMINALS		SEE GROUP 3
7	943950	1	· Cable terminal		FOR DIESEL
8	856818	1	· Connector kit		FOR THE TRANSOM STERN.