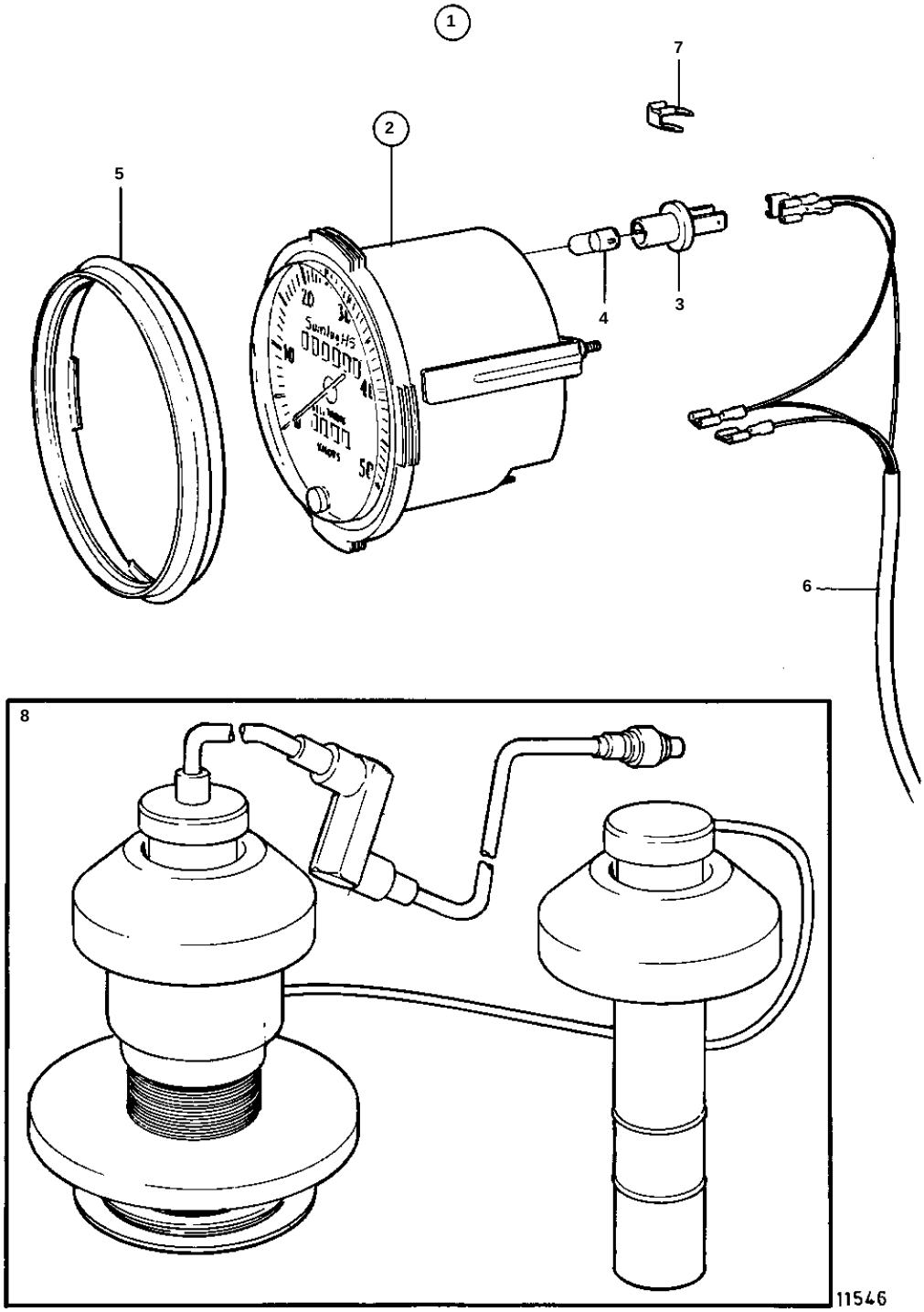
1
2
3
4
5
6
7
8
11546

REF	PART NO.	QTY	DESCRIPTION		NOTES
1	1140430	1	Electronic log kit		
2	856806	1	· Electronic log		
3	808175	1	· · Bulb socket		
4	19923	1	· · Bulb		
5	856805	1	· Front ring		
6	856862	1	· Cable kit		
7	943950	1	· Cable terminal		FOR DIESEL
8	856817	1	· Connector kit		TO BE INSTALLED THROUGH THE BOTTOM OF THE BOAT.