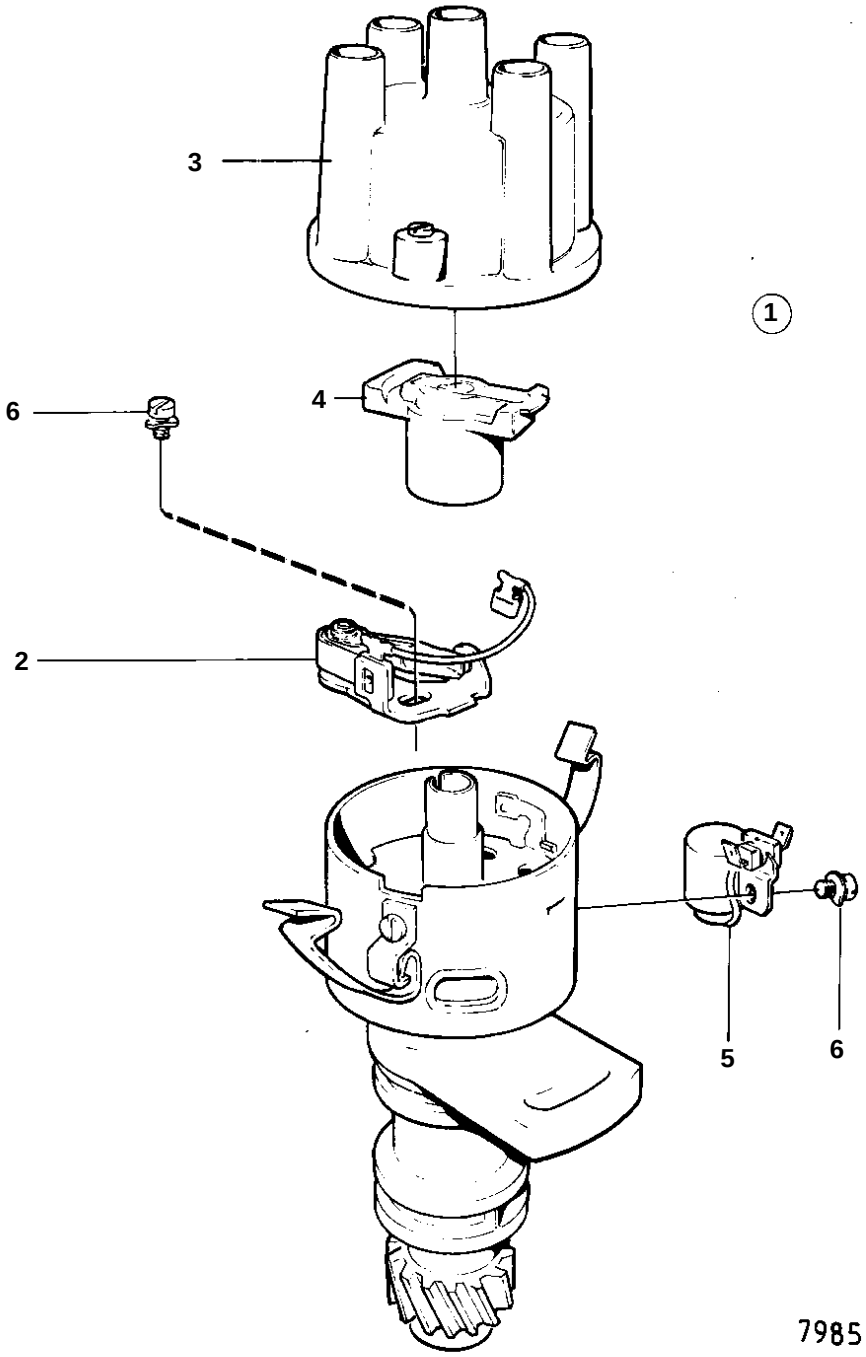
3
1
4
6
2
5
6
7985

REF	PART NO.	QTY	DESCRIPTION	
1	855712	1	Distributor	
2	243799	1	· Switch kit	
3	841263	1	· Cover	
4	243903	1	· Rotor	
5	841262	1	· Capacitor	
6	273521	1	· Repair kit	