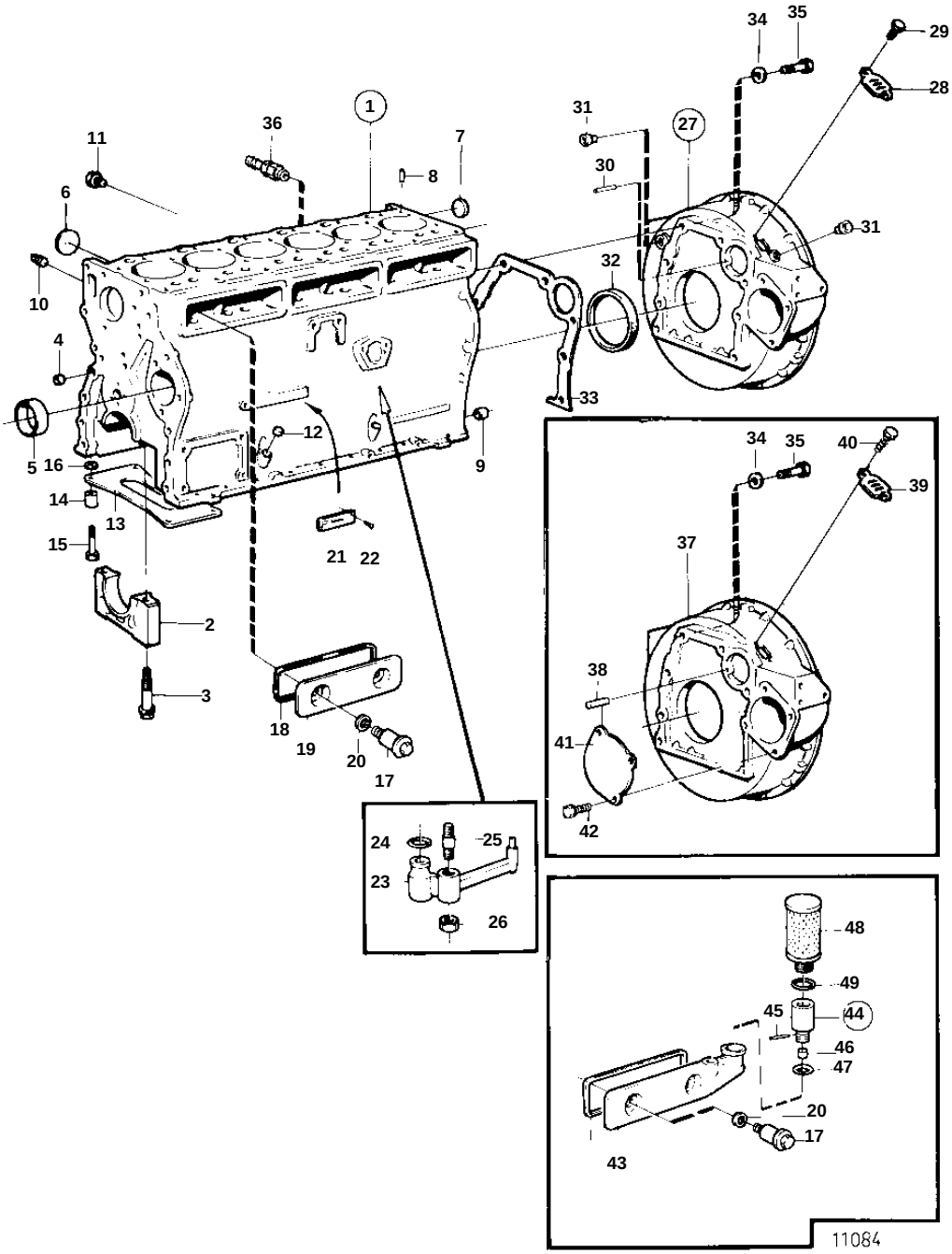
1
2
3
4
5
6
7
8
9
10
11
12
13
14
15
16
17
18
19
20
21
22
23
24
25
26
27
28
29
30
31
32
33
34
35
36
37
38
39
40
41
42
43
44
45
46
47
48
49
11084

REF	PART NO.	QTY	DESCRIPTION		NOTES
1	860463	1	Cylinder block		SN-2204144595
					REPL BY 861016
	861016	1	Cylinder block		SN2204144596-
2		7	· BEARING CAP		
3	860464	14	· Flange screw		SN-2204144595
	861005	14	· Flange screw		SN2204144596-
4	955083	4	· Cap plug		
5	1542067	7	· Bushing		
6	463905	5	· Expansion plug		
7	1542263	1	· Expansion plug		
8	946402	2	· Pin		
9	415311	3	· Sleeve		
10	952077	2	Plug		
11	191026	3	Plug		
12	955082	2	Cap plug		
13		1	PLATE		
14	1545160	4	Spacer sleeve		
15	965187	4	Screw		
16	1545204	4	Spacer sleeve		
17	859447	6	Shoulder screw		
18	1542052	3	Rubber seal		
19	1542050	3	Inspection lid		STD
20	469846	6	Sealing ring		
21		1	ENGINE SIGN		
22	950885	2	Drive screw		
23	1542320	6	Oil jet		
24	955981	6	O-ring		
25	1542380	6	Stud		
26	946035	6	Lock nut		
27	860690	1	Flywheel housing		
28	407092	1	· Cover		
29	965175	2	· Screw		
30	404069	1	· Setting indicator		
31	860926	2	· Plug		
32	860971	1	Sealing ring		
33	829487	1	Gasket		
34	941908	8	Spring washer		
35	965185	6	Flange screw		L = 40 MM
	965220	2	Flange screw		L = 45 MM
36	947893	1	Drain cock		