CRANKSHAFT AND RELATED PARTS: D41B

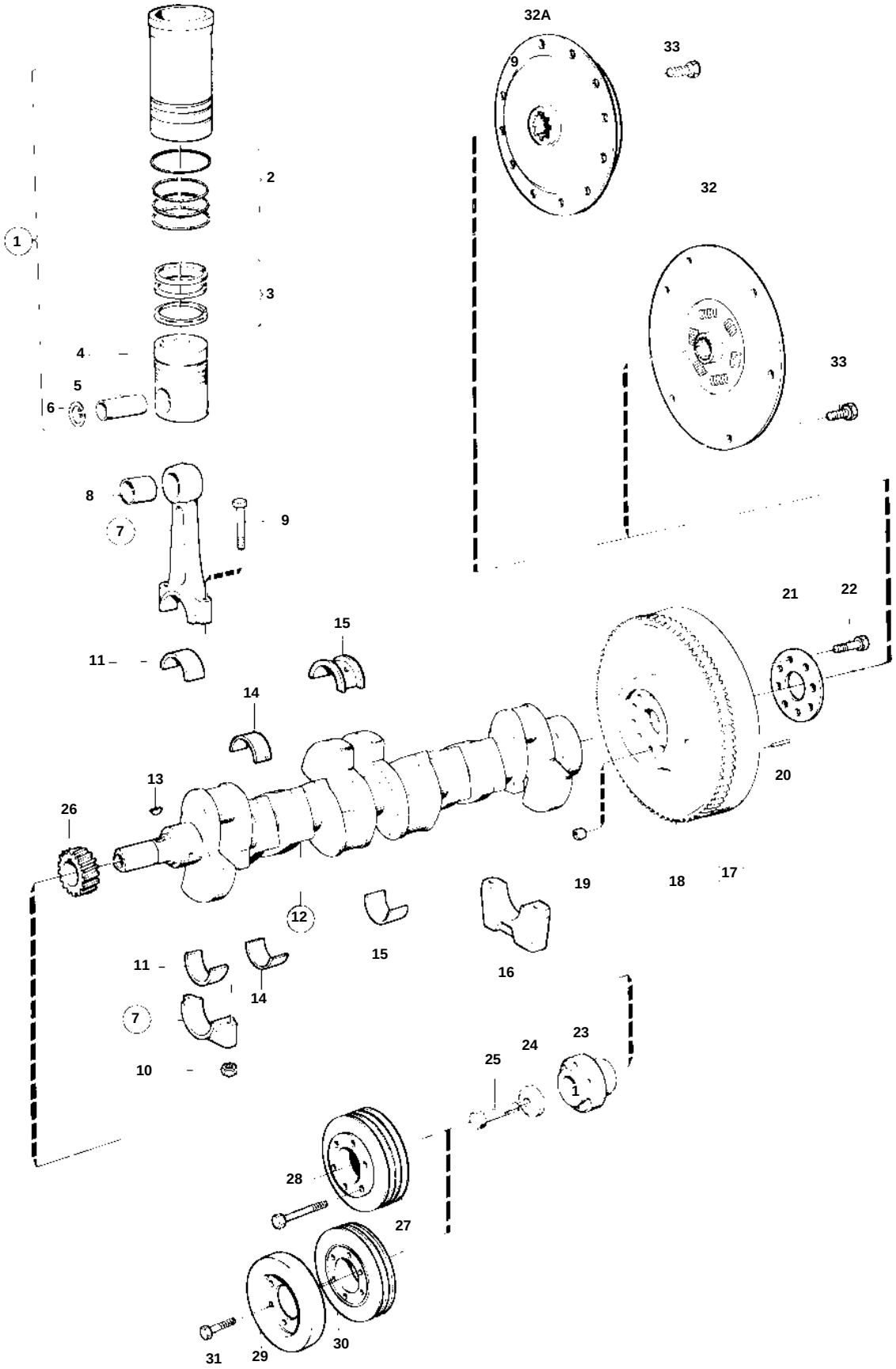

11289

REF	PART NO.	QTY	DESCRIPTION		SEE SEC.	NOTES
1	876261	6	Cylinder liner kit			
2	275751	6	· Sealing ring kit			
3	275350	6	· Piston ring kit			
4		6	· PISTON			
5	422793	6	· Piston pin			
6	914519	12	· Lock ring			
7	1542072	6	Connecting rod			
8	1542076	6	· Bushing			
9	1542077	12	· Screw			
10	1542078	12	· Nut			
11	876511	6	Big end bearing kit			STD D
	876512	6	Big end bearing kit			UNDER SIZE 0,25 MM
	876513	6	Big end bearing kit			UNDER SIZE 0,50 MM
	876514	6	Big end bearing kit			UNDER SIZE 0,75 MM
12	860379	1	Crankshaft			
13	910118	1	· Woodruff key			
14	876515	6	Main bearing kit			STD D
	876516	6	Main bearing kit			UNDER SIZE 0,25 MM
	876517	6	Main bearing kit			UNDER SIZE 0,50 MM
	876518	6	Main bearing kit			UNDER SIZE 0,75 MM
15	876519	1	Thrust bearing			STD D
	876520	1	Thrust bearing			OVER SIZE 0,10 MM/UNDER S
	876521	1	Thrust bearing			OVER SIZE 0,20 MM/UNDER S
	876522	1	Thrust bearing			OVER SIZE 0,20 MM/UNDER S
16		7	BEARING CAP		02A-1400	
17	861172	1	Flywheel			(860726)
18	829462	1	· Gear ring			
19	415311	1	· Sleeve			
20	191873	3	· Locating pin			
21	1542093	1	Bolt plate			
22	1544147	8	Screw			
23	1542196	1	Hub			
24	420124	1	Washer			
25	1542149	1	Screw			
26	1542305	1	Gear			
27	838725	1	Vibration damper			
32	855617	1	Vibration damper			
33	946173	6	Flange screw			