TMD31L-A, TAMD31P-A, TAMD31L-A, TAMD31M-A

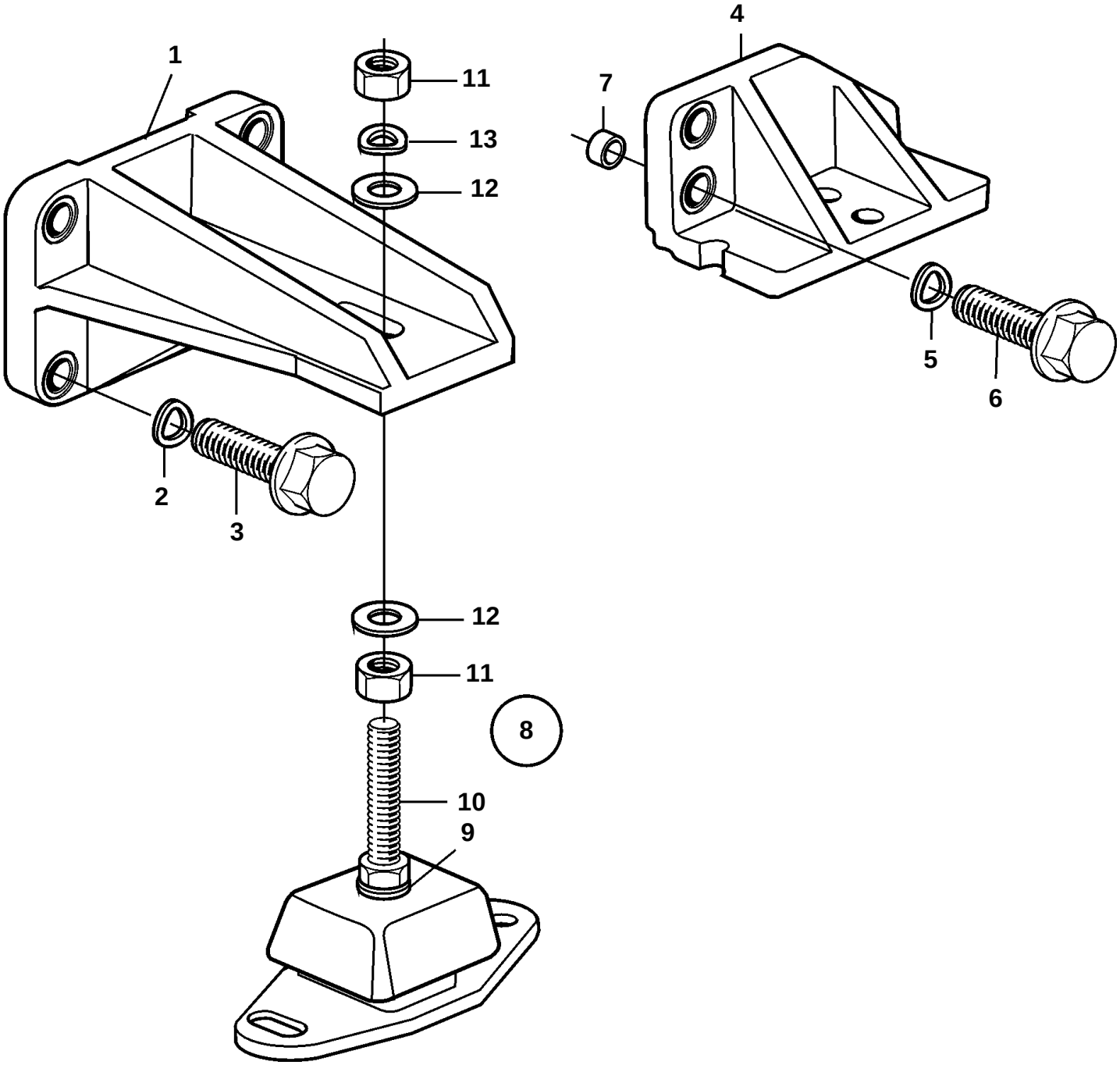

19246

TMD31L-A, TAMD31P-A, TAMD31L-A, TAMD31M-A

REF	PART NO.	QTY	DESCRIPTION		NOTES
1	3580748	2	Engine bracket		FRONT
2	940280	6	Spring washer		
3	965192	6	Flange screw		L=40mm
	965193	2	Screw		L=50mm
4	860952	1	Engine bracket		P, REAR
	860954	1	Engine bracket		S.B, REAR
5	940280	6	Spring washer		
6	965225	6	Flange screw		
8	856834	4	Rubber cushion		
9	955900	4	Washer		
10	860950	4	Adjuster screw		
11	955806	8	Nut		
12	955901	4	Washer		D=34mm
	978991	4	Washer		D=40mm
13	941913	4	Spring washer		