Fuel Filter: TAMD74A-A, TAMD74A-B

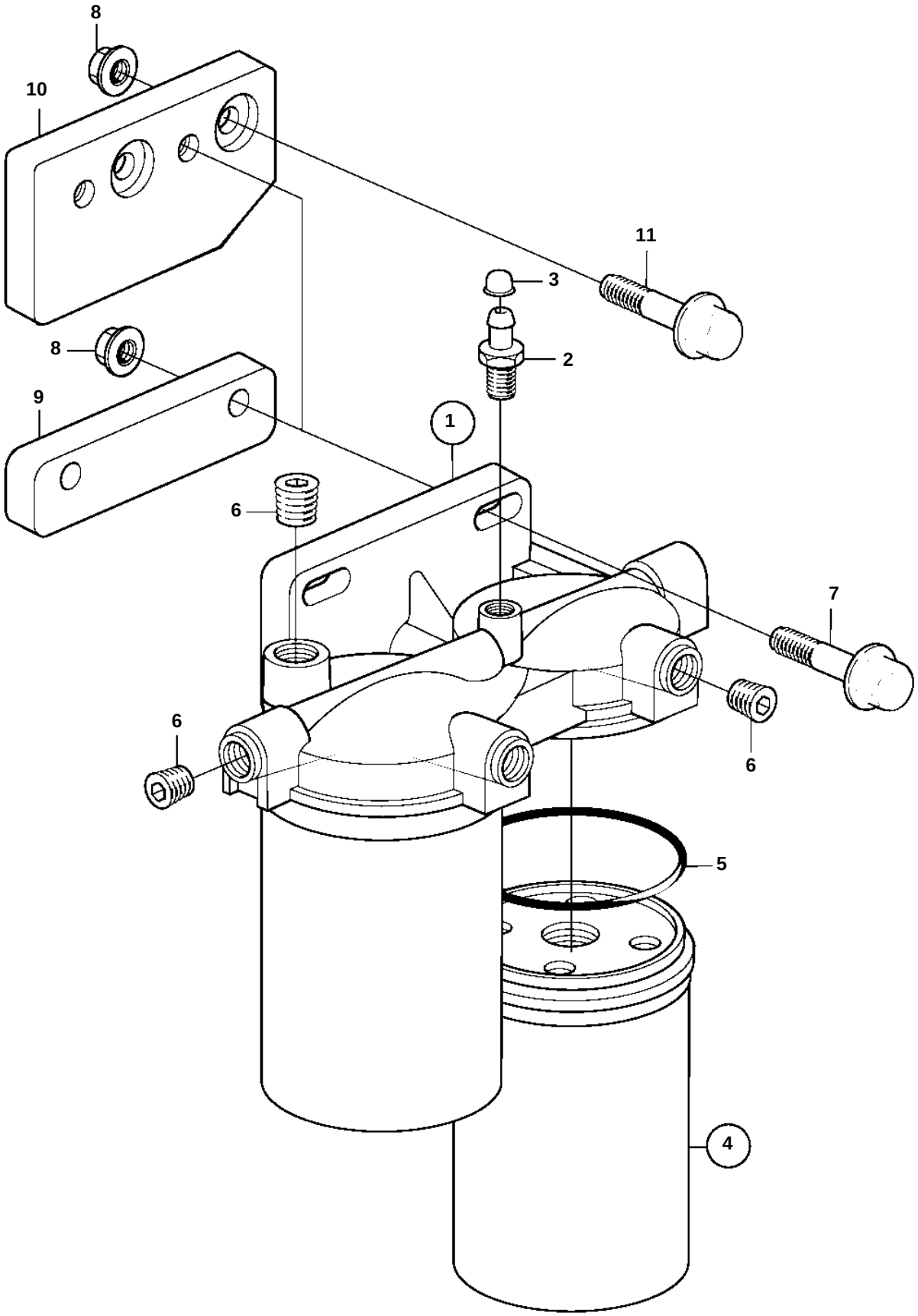

REF	PART NO.	QTY	DESCRIPTION		NOTES
1	8194541	1	Filter housing		
2	1330191	1	· Tap		
3		1	· Protecting cover		
4	3825133	2	Fuel filter		(466987)
5	3582285	2	· Sealing ring		
6	968062	3	Plug		
7	965186	2	Flange screw		L=50mm
8	971071	2	Nut		
9	865262	1	Spacer		