TAMD72P-A, TAMD72WJ-A

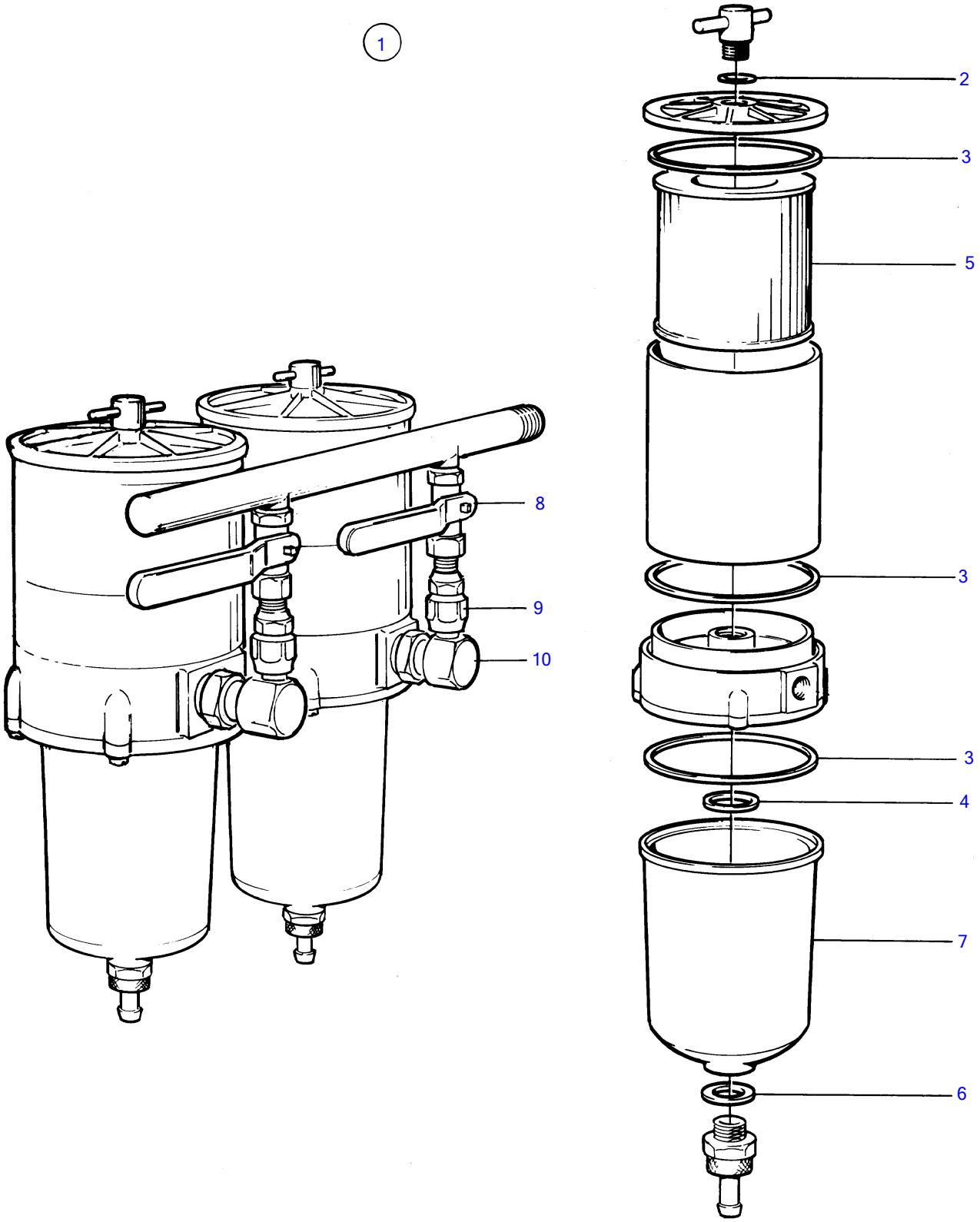

TAMD72P-A, TAMD72WJ-A

REF	PART NO.	QTY	DESCRIPTION	NOTES
1	848045	1	Fuel filter	Replaced by 3825022, Early type
	848044	2	・Fuel filter	Repl by 3825018
2	838505	2	・・O-ring	
3	846719	6	・・Gasket	
4	847523	2	・・Gasket	
5	3838852	2	・・Fuel filter insert	(3825027) 10 micron
6	838500	2	・・Gasket	
7	3838851	2	・・Bowl	(848293)
8	(847524)	4	・Ball valve	Obsolete part
9	(847525)	4	・Plug	Obsolete part
10	(847526)	4	・Nipple	Obsolete part