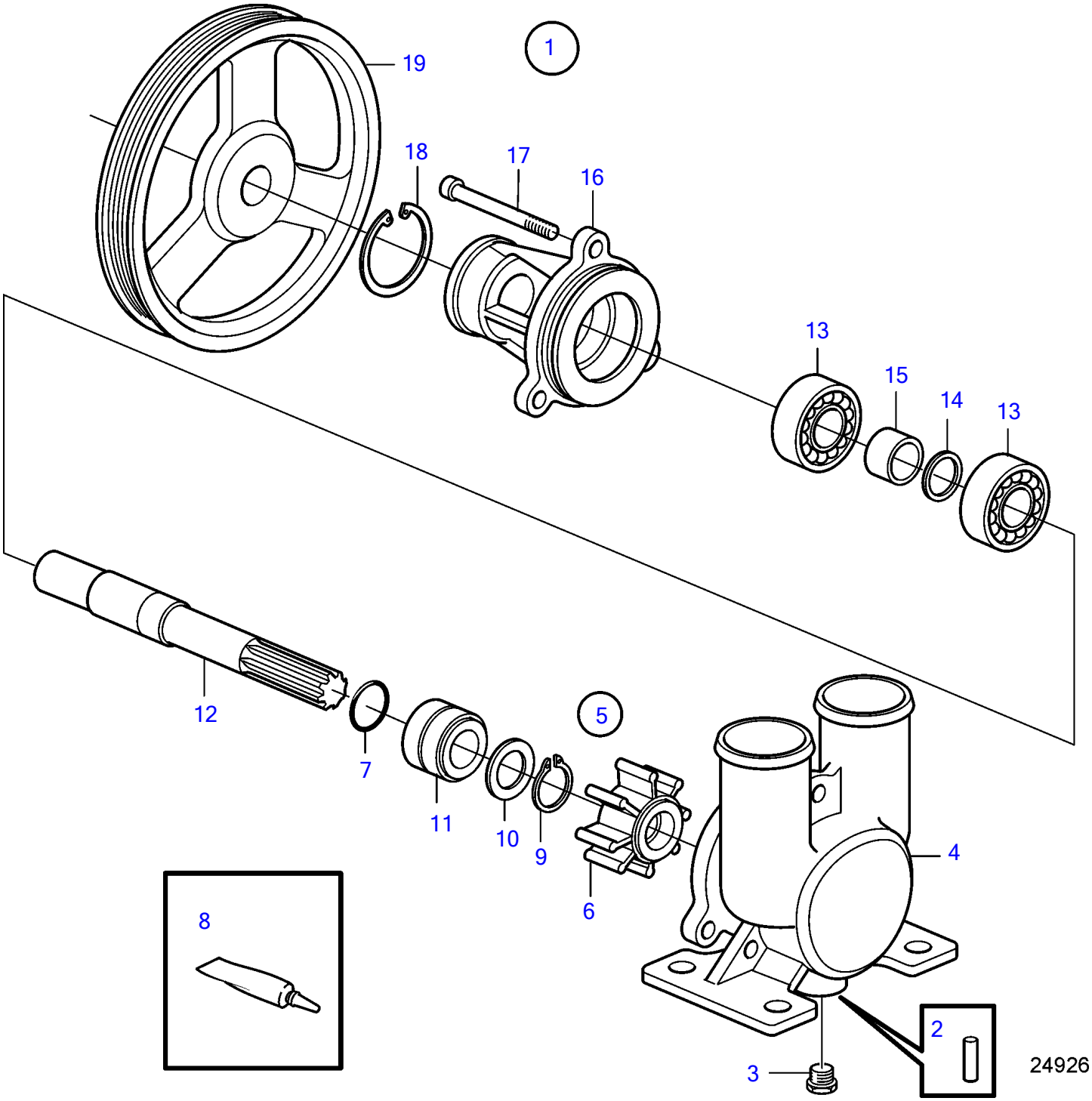
1
19
18
17
16
13
15
14
13
12
5
7
11
10
9
6
4
8
2
3
24926

REF	PART NO.	QTY	DESCRIPTION	SEE SEC.	NOTES
5	21381690	2	Repair kit	35801	
6		2	▪ Impeller		
8	3862178	2	▪ Grease		
9	809444	2	Lock ring		
10	3583988	2	Washer		
11	(21379134)	2	Sealing ring		Obsolete part
12		2	Shaft		
17		2	Hex. socket screw		