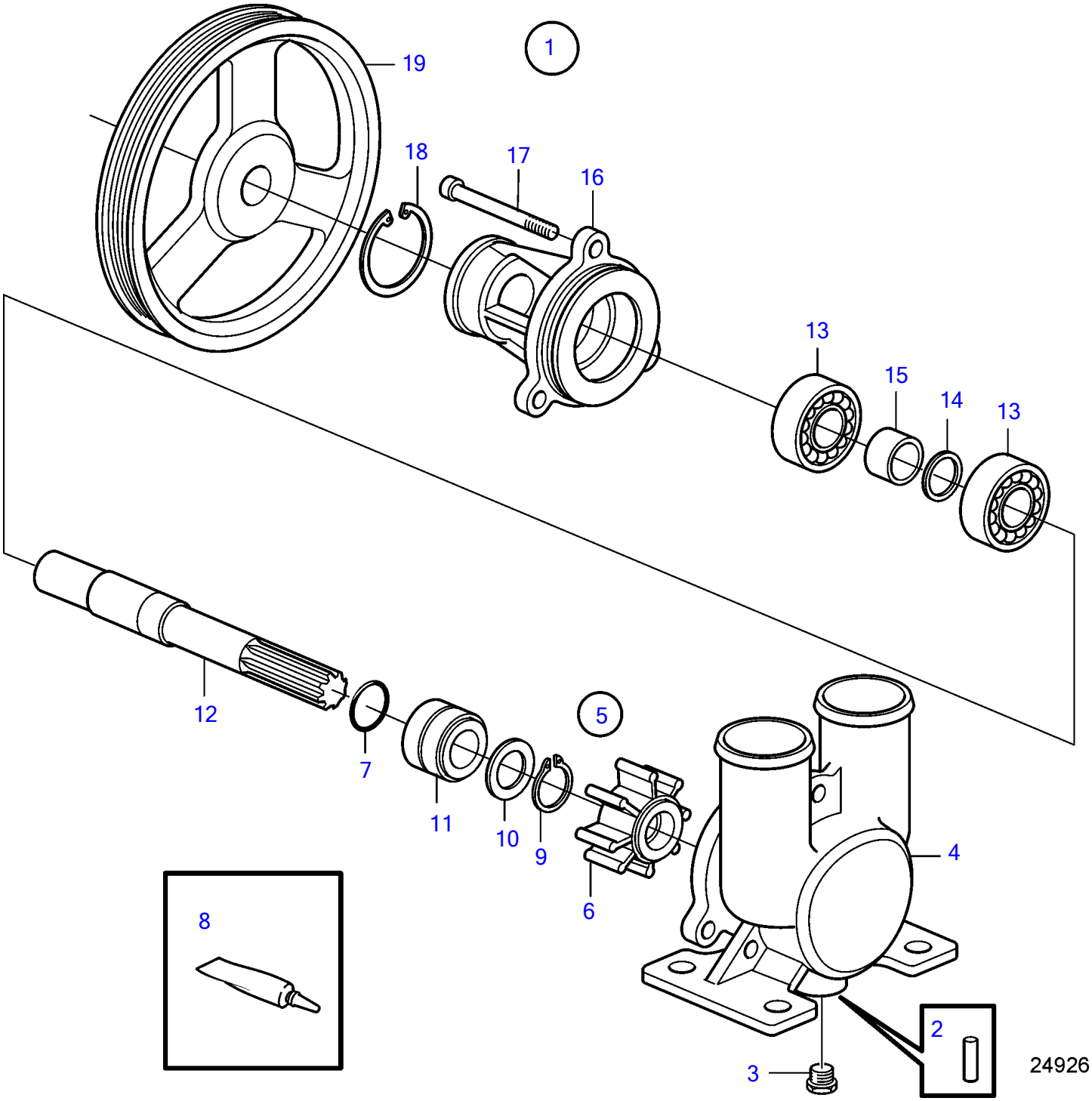
1
19
18
17
16
13
15
14
13
12
5
7
11
10
9
6
4
8
2
3
24926

REF	PART NO.	QTY	DESCRIPTION
5	21381693	1	Impeller kit
6		1	▪ Impeller
7		1	▪ O-ring
8	3862178	1	▪ Grease