Engine Mounts for Reverse Gear HS25A-A and HS45A-A

D3-110I-A, D3-110I-B, D3-110I-C, D3-130I-A, D3-130I-B, D3-130I-C, D3-160I-A, D3-160I-B, D3-160I-C, D3-190I-B, D3-190I-C

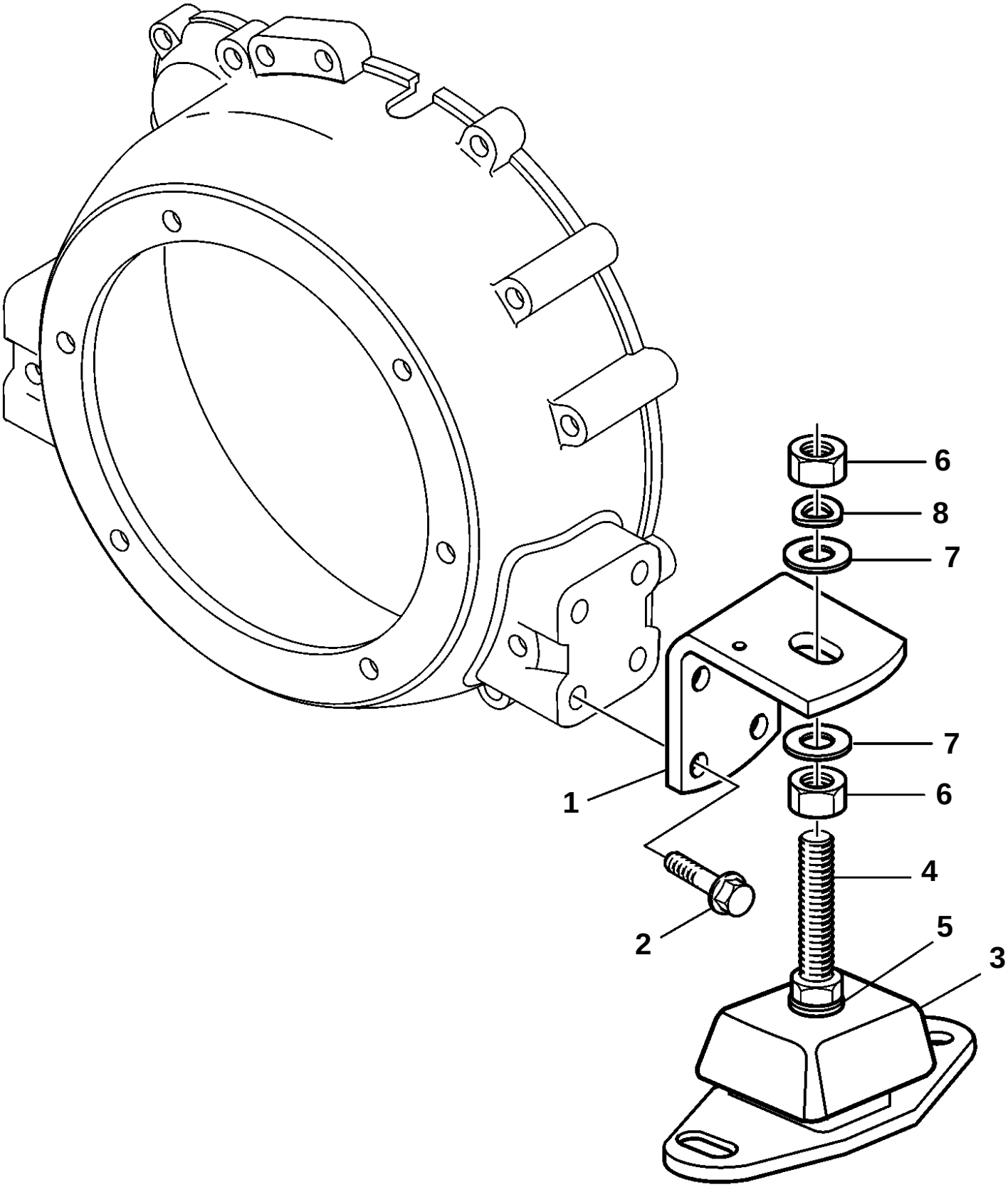

20425

D3-110I-A, D3-110I-B, D3-110I-C, D3-130I-A, D3-130I-B, D3-130I-C, D3-160I-A, D3-160I-B, D3-160I-C, D3-190I-B, D3-190I-C

REF	PART NO.	QTY	DESCRIPTION	NOTES
1	3589825	2	Bracket	
2	965193	8	Flange screw	M12x50mm
3	846765	2	Rubber element	
4	860950	2	Adjusting screw	
5	955900	2	Washer	
6	955806	4	Hexagon nut	
7	978991	4	Washer	
8	941913	2	Spring washer	