D3-110I-A, D3-130A-A, D3-130I-A, D3-160A-A, D3-160I-A

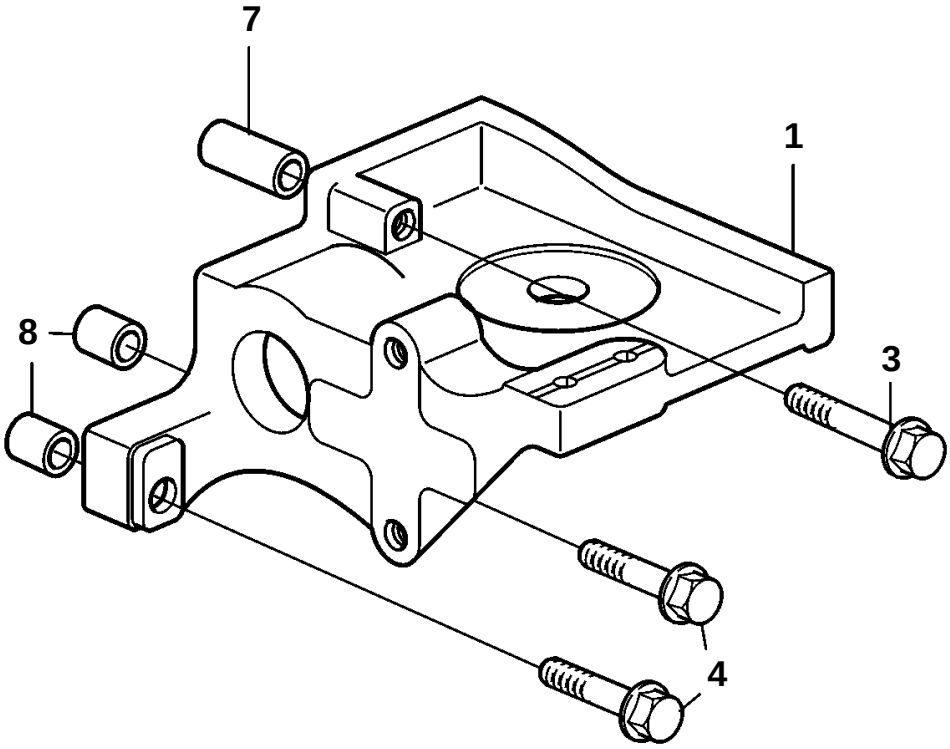

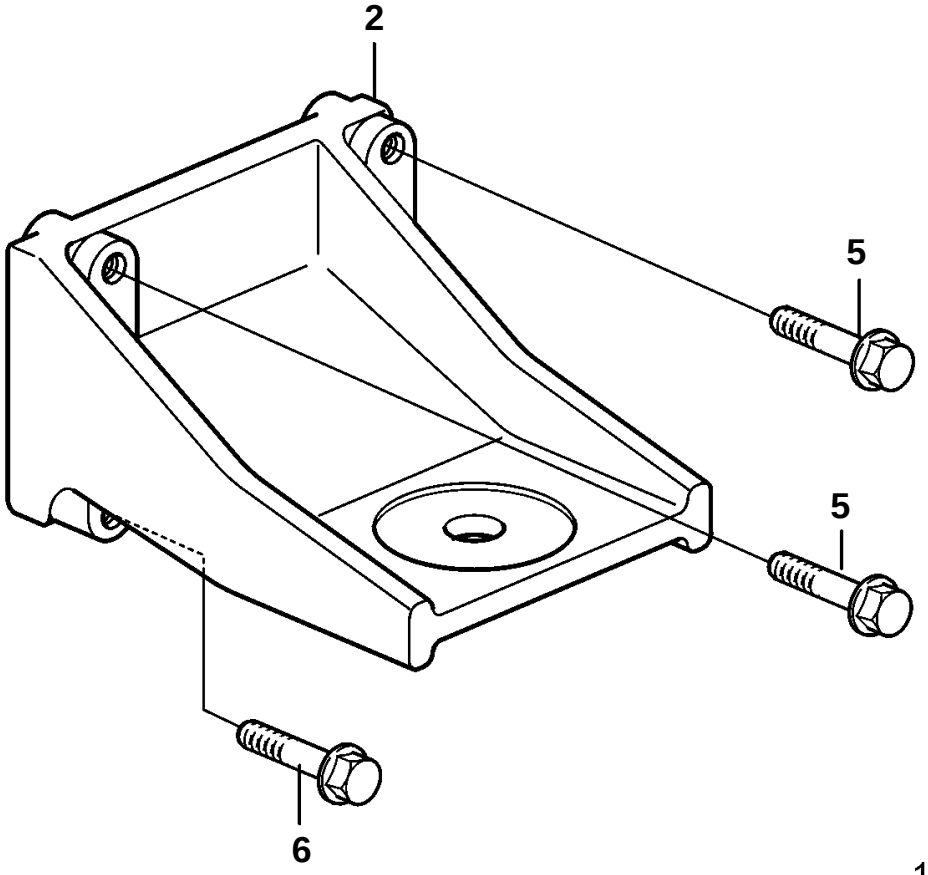

19688

D3-110I-A, D3-130A-A, D3-130I-A, D3-160A-A, D3-160I-A

REF	PART NO.	QTY	DESCRIPTION
1	888436	1	Engine bracket, left
2	3883173	1	Engine bracket, right
3	984652	1	Flange screw
4	984651	2	Flange screw
5	984663	3	Flange screw
6	984662	1	Flange screw
7	984644	1	Spacer sleeve
8	829653	2	Spacer sleeve