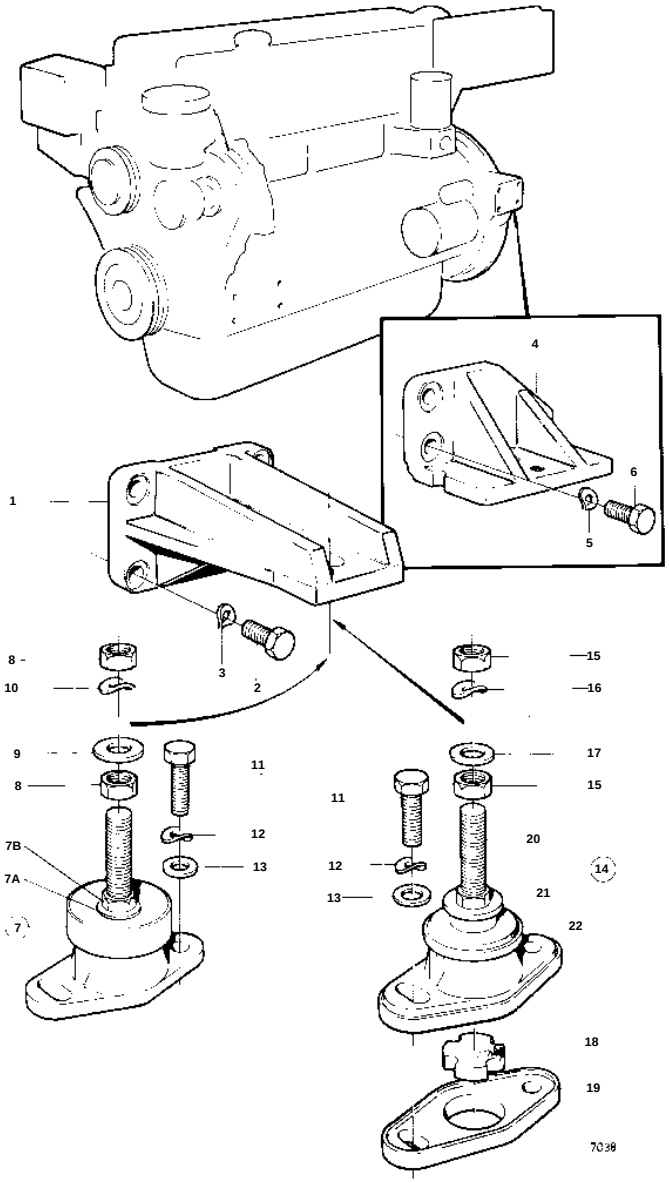
6
4
6
1
5
8
3
15
10
2
16
9
17
11
8
15
11
12
20
7B
12
13
14
7A
13
21
7
22
18
19
7038

REF	PART NO.	QTY	DESCRIPTION		SEE SEC.	NOTES
1	829517	2	Bracket			
2	955342	8	Screw			
3	940280	8	Spring washer			
4	829515	1	Bracket			P
	829516	1	Bracket			S.B
5	940143	6	Lock washer			
6	955341	6	Screw			L = 35 MM
7	829976	4	Rubber element			
			Bulletin 44-26		44-26-EN	Reinforced Rubber Cushion
7A	955900	4	· Washer			
7B	829567	4	· Adjuster screw			
8	955805	8	Nut			
9	191940	8	Washer			EARLY TYPE
	191940	6	Washer			LATE TYPE
	955900	2	Washer			LATE TYPE
10	829892	16	Lock washer			EARLY TYPE
11	959242	8	Screw			
12	941908	8	Spring washer			
13	960148	8	Washer			