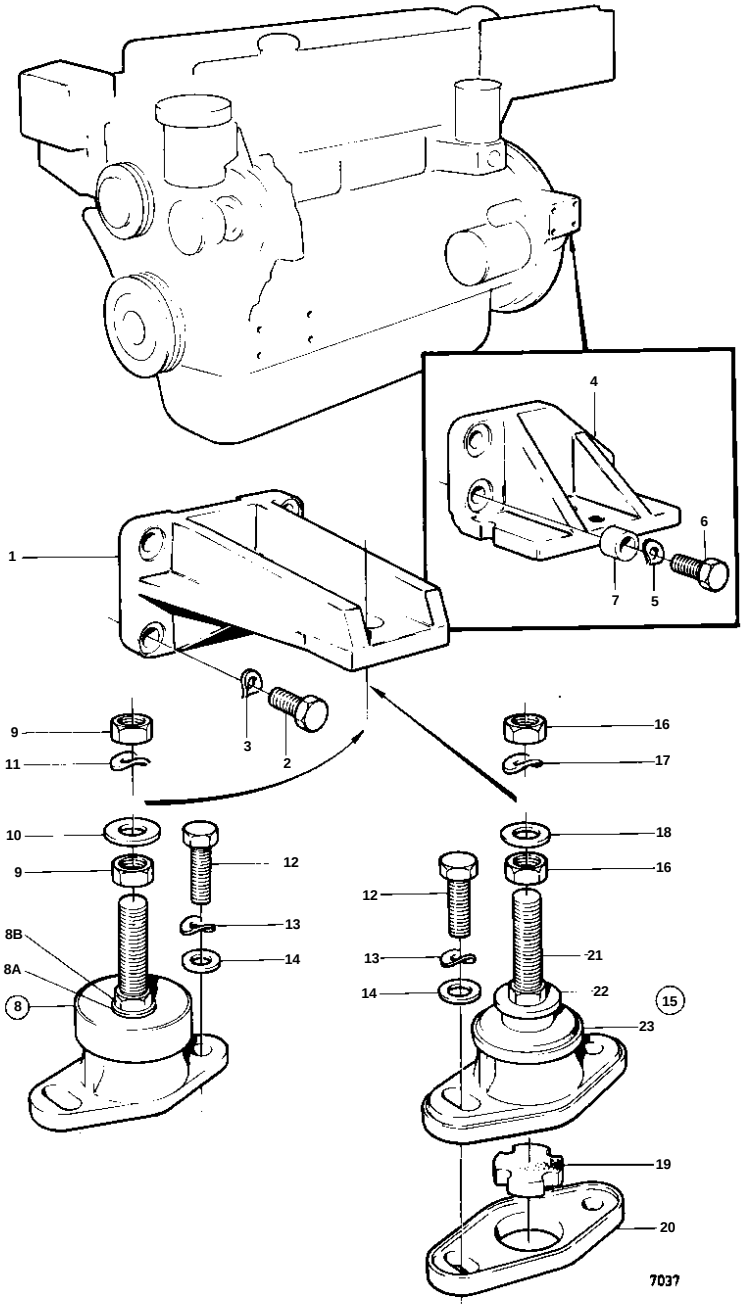
4
6
1
7
5
9
3
2
16
11
17
10
18
9
12
16
12
13
8B
13
21
14
8A
14
22
15
8
23
19
20
7037

REF	PART NO.	QTY	DESCRIPTION		SEE SEC.	NOTES
1	829517	2	Bracket			
2	955342	8	Screw			
3	940280	8	Spring washer			
4	829515	1	Bracket			P
	829516	1	Bracket			S.B
5	940143	6	Lock washer			
6	955341	5	Screw			L = 35 MM
	955342	1	Screw			L = 40 MM, ALT
	955341	1	Screw			L = 35 MM, ALT
7	843122	1	Spacer sleeve			S.B
8	829976	4	Rubber element			
			Bulletin 44-26		44-26-EN	Reinforced Rubber Cushion
8A	955900	4	· Washer			
8B	829567	4	· Adjuster screw			
9	955805	8	Nut			
10	191940	8	Washer			EARLY TYPE
	191940	6	Washer			LATE TYPE
	955900	2	Washer			LATE TYPE
11	829892	16	Lock washer			EARLY TYPE
12	955321	8	Screw			
13	941908	8	Spring washer			
14	960148	8	Washer			