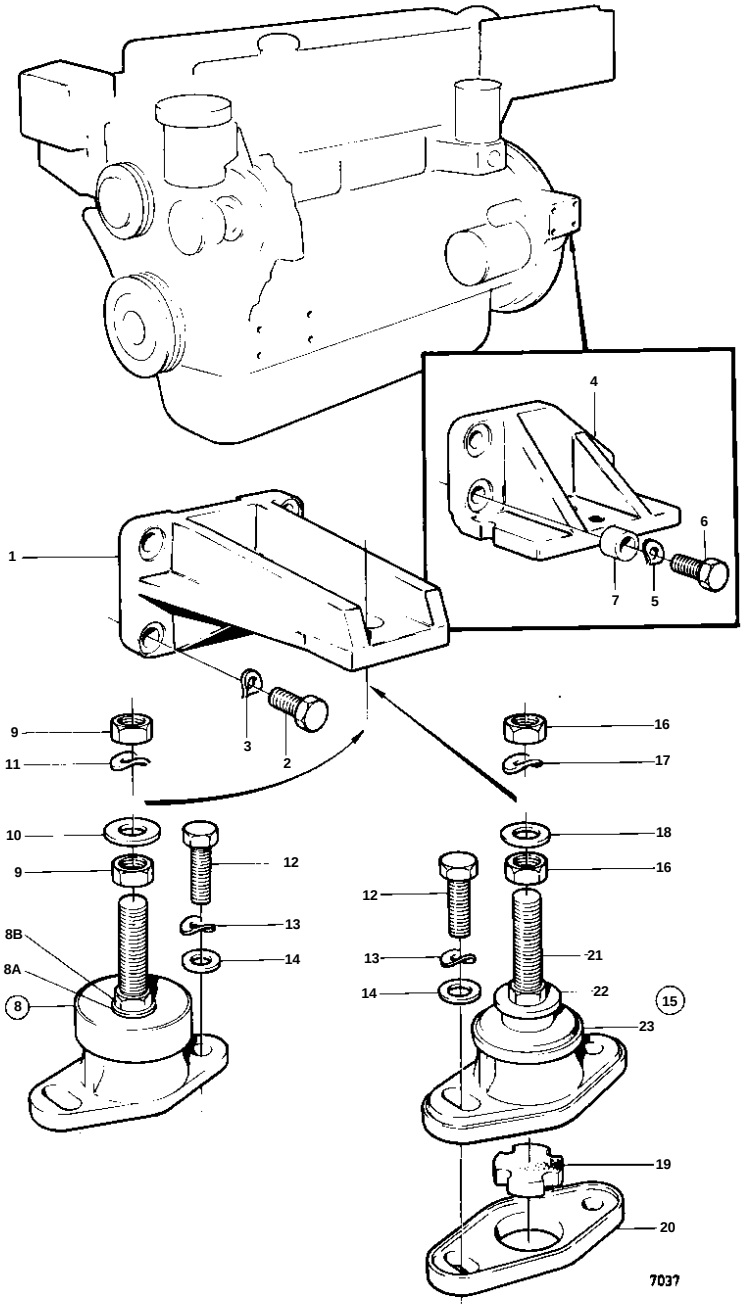
4
6
1
7
5
9
3
2
16
11
17
10
18
9
12
16
12
13
8B
13
21
14
8A
14
22
15
8
23
19
20
7037

REF	PART NO.	QTY	DESCRIPTION		NOTES
1	829517	2	Bracket		
2	955342	8	Screw		
3	940280	8	Spring washer		
12	955321	4	Screw		
13	941908	4	Spring washer		
14	960148	4	Washer		
15	843297	2	Rubber element		MO 33151-
16	955805	4	· Nut		
17	941912	2	· Spring washer		
18	191940	2	· Washer		
19	843299	2	· Rubber disc		
20	843286	2	· Base		
21	829567	2	· Adjuster screw		
22	843298	2	· Washer		
23	843323	2	· Rubber element		