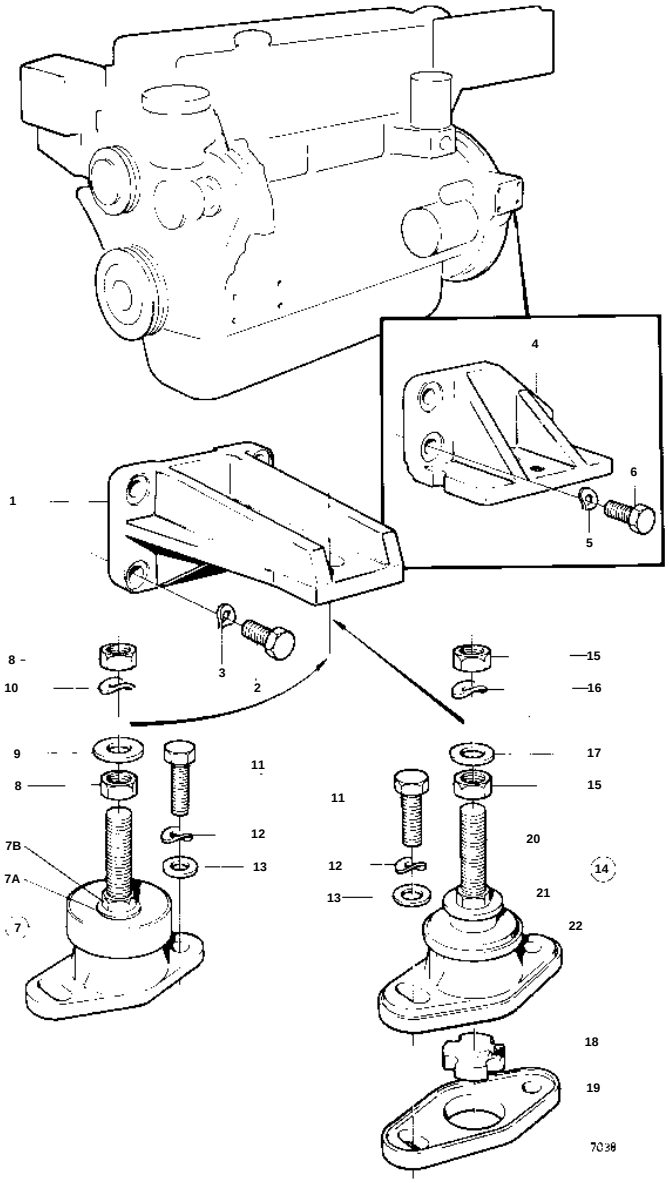
6
4
6
1
5
8
3
15
10
2
16
9
11
17
8
15
11
12
20
7B
12
13
14
7A
13
21
7
22
18
19
7038

REF	PART NO.	QTY	DESCRIPTION		NOTES
1	829517	2	Bracket		
2	955342	8	Screw		
3	940280	8	Spring washer		
11	955321	4	Screw		
12	941908	4	Spring washer		
13	960148	4	Washer		
14	843297	2	Rubber element		MO 33151-
15	955805	4	· Nut		
16	941912	2	· Spring washer		
17	191940	2	· Washer		
18	843299	2	· Rubber disc		
19	843286	2	· Base		
20	829567	2	· Adjuster screw		
21	843298	2	· Washer		
22	843323	2	· Rubber element		