PR0PELLER CONE KIT. TOOL, CONE TIGHTENING, M20

DRIVE DP

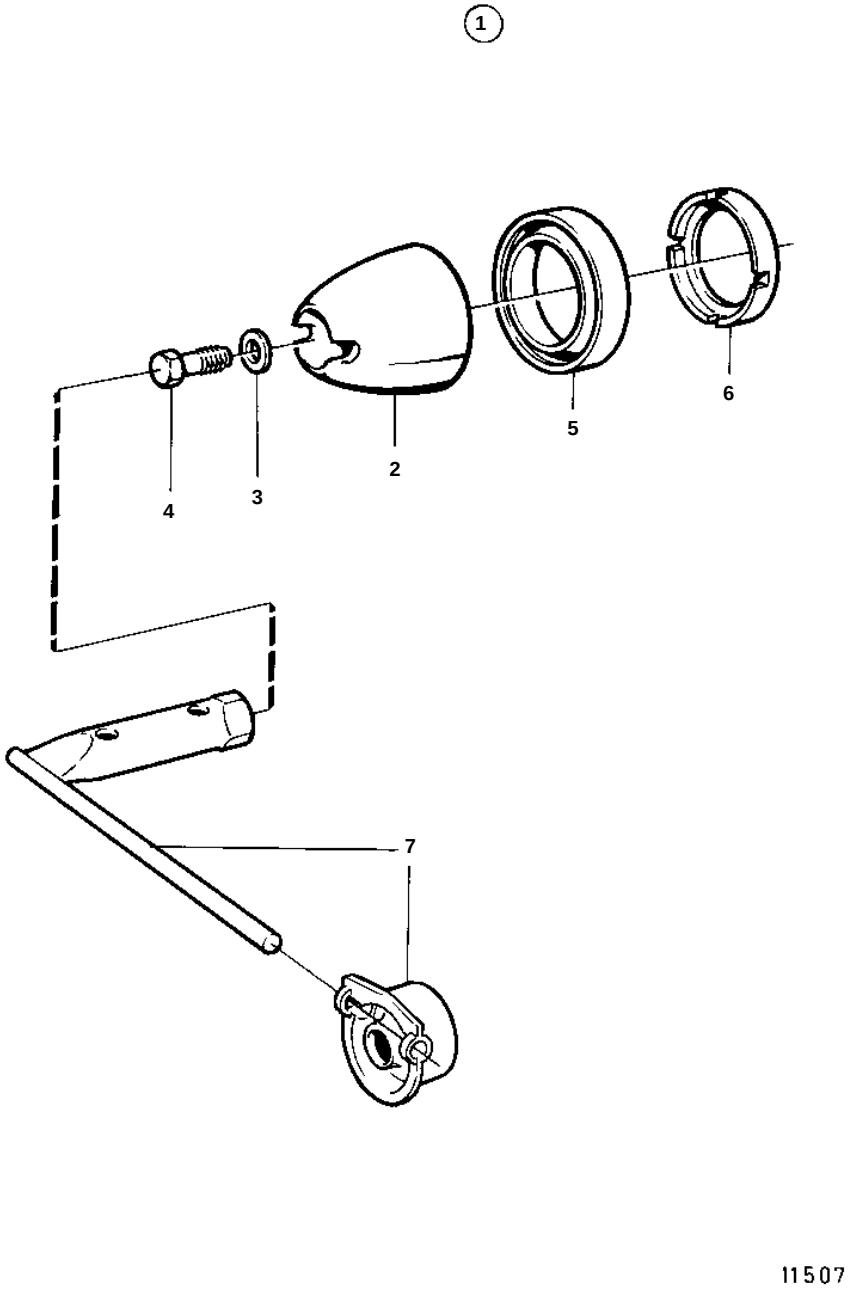

PR0PELLER CONE KIT. TOOL, CONE TIGHTENING, M20

DRIVE DP

REF	PART NO.	QTY	DESCRIPTION		NOTES
1	872549	1	Propeller cone kit		
2		1	· PR0PELLER CONE		
3	943194	1	· Washer		
4	872546	1	· Lock screw		
5	853676	1	· Spacer ring		FOR DIESEL ENGINE WITH DUOPROP DRIVE UNIT.
6	854294	1	· Plastic washer		
7	873058	1	Tool kit		