COMMON

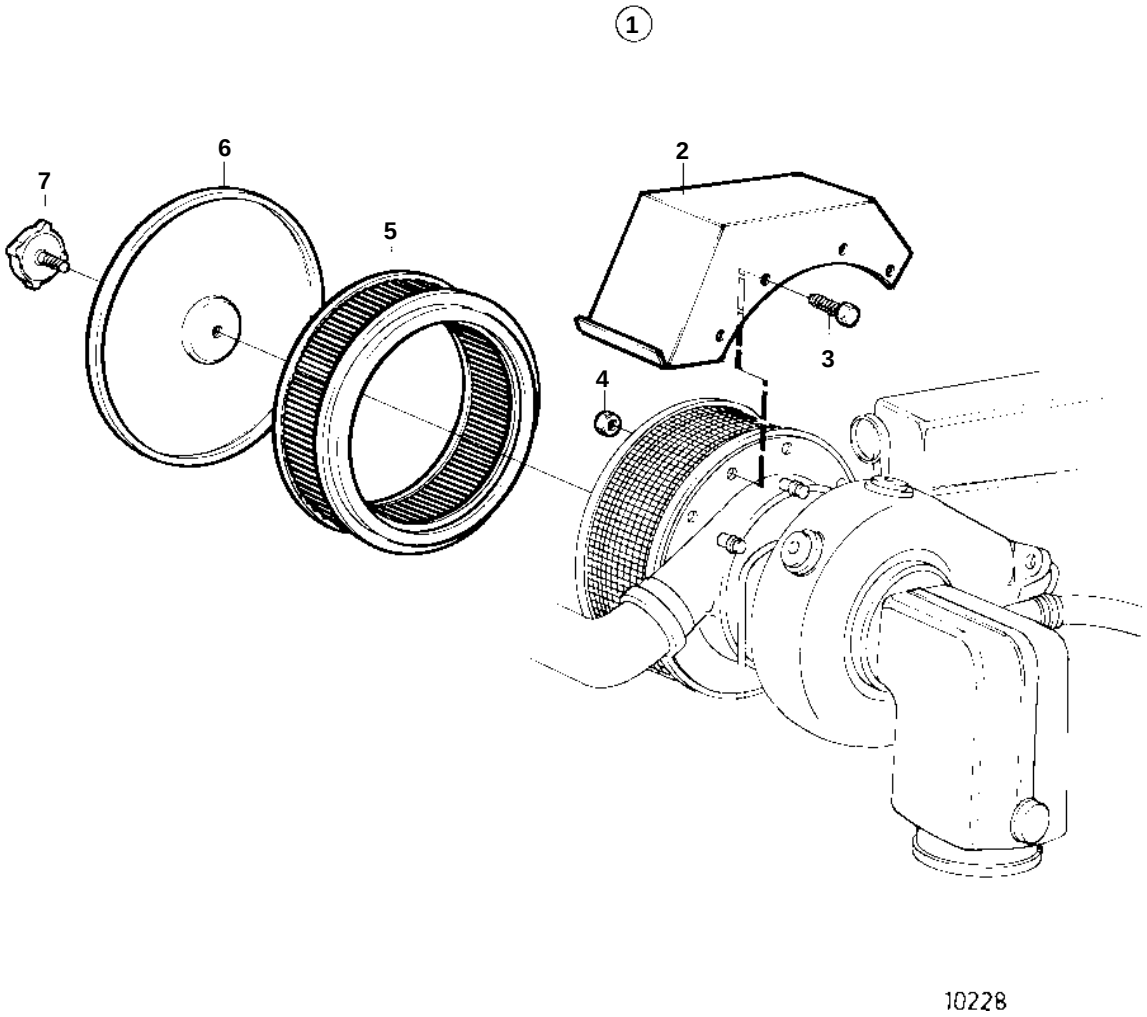

COMMON

REF	PART NO.	QTY	DESCRIPTION		NOTES
1	859563	1	Drip protection		
2	859562	1	· Drip protection		
3	945358	4	· Flange screw		
4	945407	4	· Flange nut		
5		1	FILTER INSERT		SEE GROUP 2B
6		1	COVER		SEE GROUP 2B
7		1	HANDLE		SEE GROUP 2B