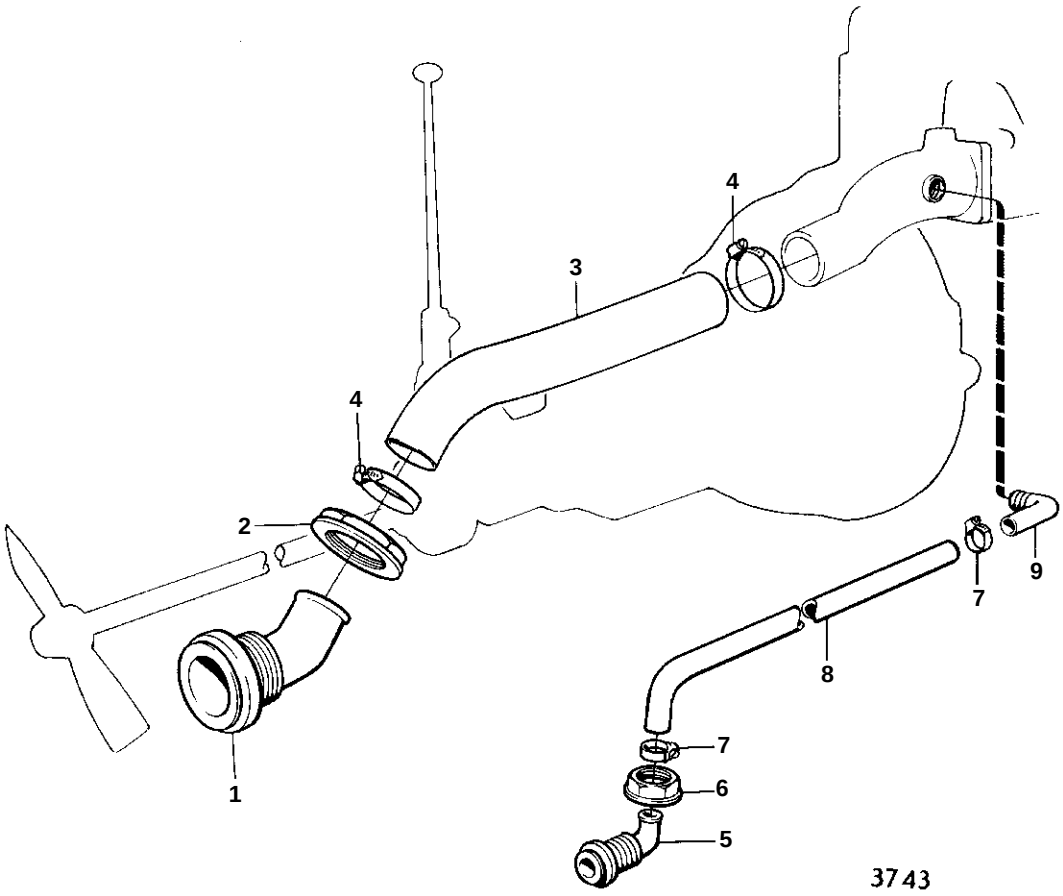
4
3
4
2
9
7
8
7
6
5
1
3743

MD21B

REF	PART NO.	QTY	DESCRIPTION		NOTES
1	827873	1	Hull fitting		
2	827876	1	Nut		
3	828465	X	Exhaust hose		
4	961673	2	Clamp		
5	829315	1	Grommet		MD21A, MD21B FOR SEPARATE WATER OUTLET.
6	836879	1	Nut		
7	961668	2	Hose clamp		
8	944386	X	Hose		
9		1	ELBOW NIPPLE		SEE GROUP 2A